SIEMENS

Data sheet 3SB1400-0A

Contact block, 22 and 30 mm, 1 NO + 1 NC, screw terminal, front plate mounting !!! Phased-out product !!! Successor is SIRIUS ACT 3SU1 Preferred successor type is >>3SU1400-1AA10-1FA0<<

General technical data		
product type designation		Contact block
design of the product		Miscellaneous

Certificates/ approvals	
General Product Approval	**other**

CSA CCC UL EAC

Confirmation

Further information

Information- and Downloadcenter (Catalogs, Brochures,…)
https://www.siemens.com/ic10
Industry Mall (Online ordering system)
https://mall.industry.siemens.com/mall/en/en/Catalog/product?mlfb=3SB1400-0A
Cax online generator
http://support.automation.siemens.com/WW/CAXorder/default.aspx?lang=en&mlfb=3SB1400-0A
Service&Support (Manuals, Certificates, Characteristics, FAQs,...)
https://support.industry.siemens.com/cs/ww/en/ps/3SB1400-0A
Image database (product images, 2D dimension drawings, 3D models, device circuit diagrams, EPLAN macros, ...)
http://www.automation.siemens.com/bilddb/cax_de.aspx?mlfb=3SB1400-0A&lang=en

Subject to change without notice
© Copyright Siemens

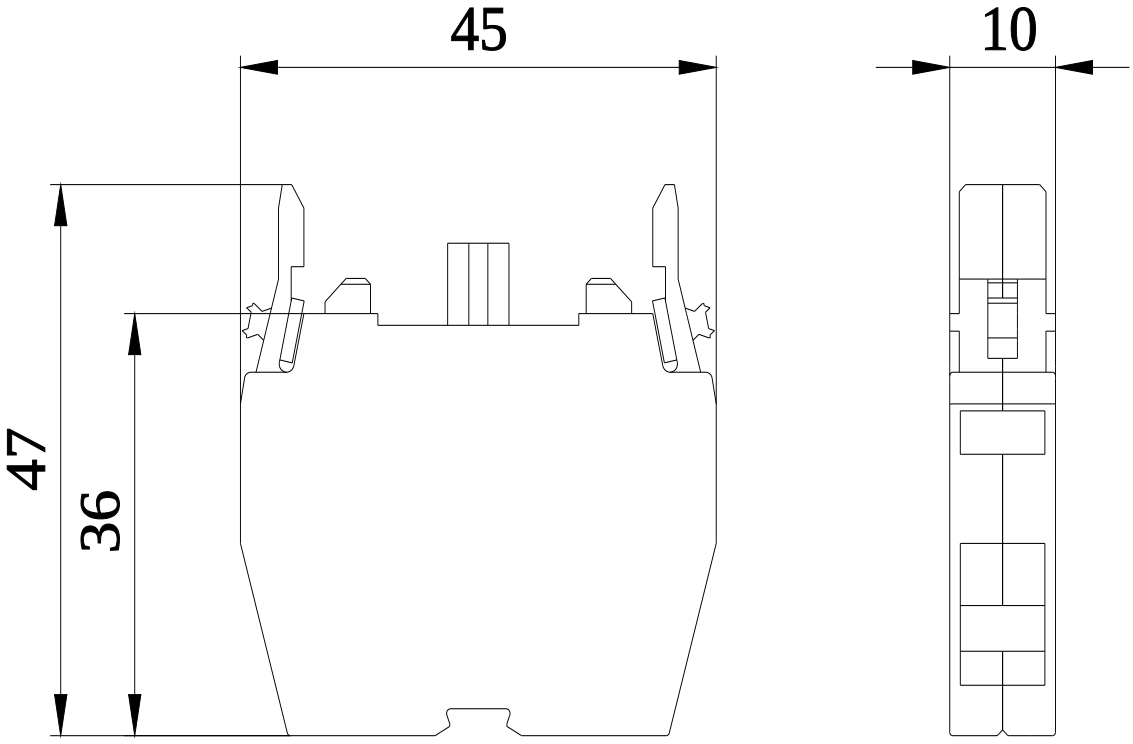

last modified: 1/6/2021

Subject to change without notice
© Copyright Siemens