TA7366P
TA7367P

T-77-21

5-LED LEVEL METER DRIVER

The TA7366P and TA7367P are designed for 5 LED level meter driver.
Which are consist of one input amplifier and five comparators for LED level indication.

- Low Spurious Noise Operation.
- Constant Driving Current : I_O=8mA(Typ.)
- Indication Level Steps
  - : TA7366P 5dB, 5dB, 3dB, 3dB
  - : TA7367P 2dB, 2dB, 2dB, 2dB
- Wide Operating Supply Voltage Range
  - : V_{CC}=4～12V
- Variable Input Amplifier Gain : G_V=0～20dB

Unit in mm

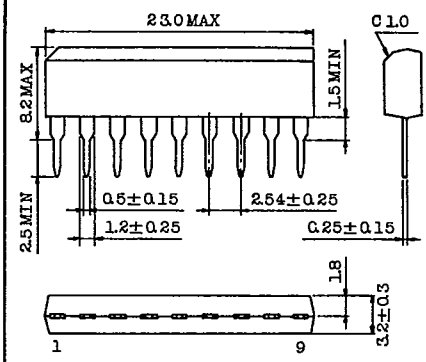

Lead pitch is 2.54 and tolerance is ±0.25 against theoretical center of each lead that is obtained on the basis of No.1 lead.

JEDEC	—
TOSHIBA	S9A-P

Weight : 0.92g

MAXIMUM RATINGS (Ta=25°C)

CHARACTERISTIC	SYMBOL	RATING	UNIT
Supply Voltage	V_{CC}	14	V
LED Driving Terminal Voltage (Note 1)	V_L	15	V
Power Dissipation (Note 2)	P_D	600	mW
Operating Temperature	T_{opr}	-25～75	°C
Storage Temperature	T_{stg}	-55～150	°C

Note 1 : For Pin 1～4 and 6
2 : Derated above Ta=25°C in the proportion of 4.8mW/°C.

TA7366P
TA7367P

ELECTRICAL CHARACTERISTICS

(Unless otherwise specified, V_{CC}=9V, f=1kHz, Ta=25°C)

CHARACTERISTIC	SYMBOL	TEST CIR-CUIT	TEST CONDITION	MIN.	TYP.	MAX.	UNIT
Quiescent Current	I_{CCQ}	-	V_{IN}=0V	-	3	5	mA
Output Current	$I_{O(1\sim5)}$	-		5	8	10	mA
Output Leak Current	$I_{O(OFF)}$	-		-	-	50	μA
Sensitivity	$V_{LD5(ON)}$	-	R_S=24kΩ, R_f=100kΩ	-	230	-	mV_{rms}

TA7366P

LED Turn-on Input Level	LD_5	-	R_S=24kΩ, R_f=100kΩ I_O=1mA	-1	0	1	dB
	LD_4	-		-4	-3	-2	dB
	LD_3	-		-7.5	-6	-4.5	dB
	LD_2	-		-13	-11	-9	dB
	LD_1	-		-19	-16	-13	dB

TA7367P

LED Turn-on Input Level	LD_5	-	R_S=24kΩ, R_f=100kΩ I_O=1mA	-1	0	1	dB
	LD_4	-		-3	-2	-1	dB
	LD_3	-		-5	-4	-3	dB
	LD_2	-		-7	-6	-5	dB
	LD_1	-		-9	-8	-7	dB

TA7366P
TA7367P

TEST CIRCUIT/BLOCK DIAGRAM

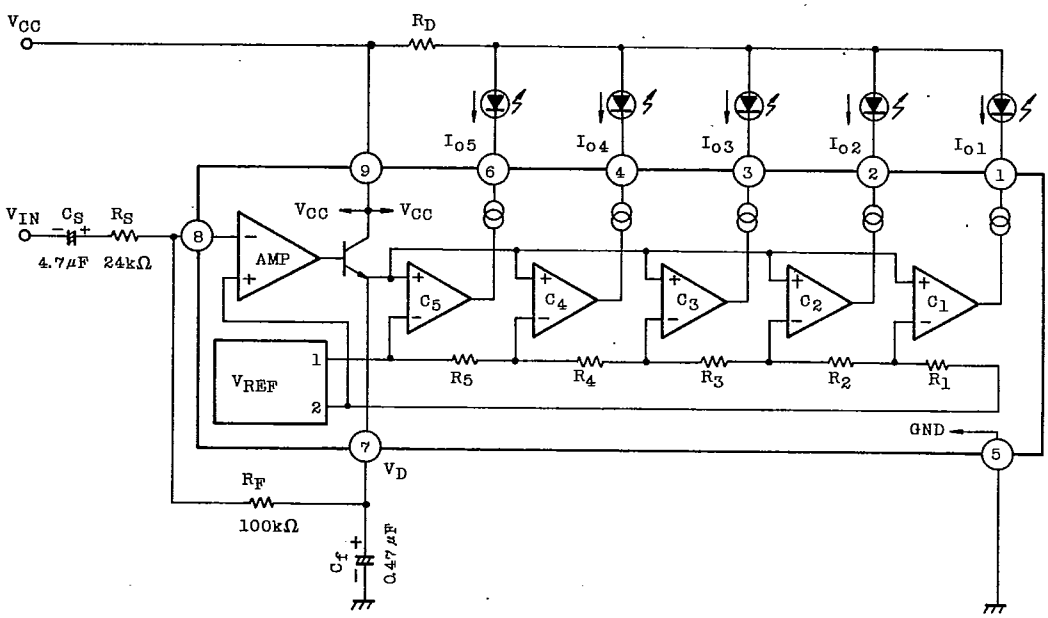

INTERNAL RESISTANCE VALUE

	TA7366P	TA7367P	UNIT
R1	1.36	3.66	kΩ
R2	1.08	0.948	kΩ
R3	1.89	1.19	kΩ
R4	1.78	1.50	kΩ
R5	2.50	1.89	kΩ

TA7366P
TA7367P

PRECAUTION FOR USE AND APPLICATION METHOD

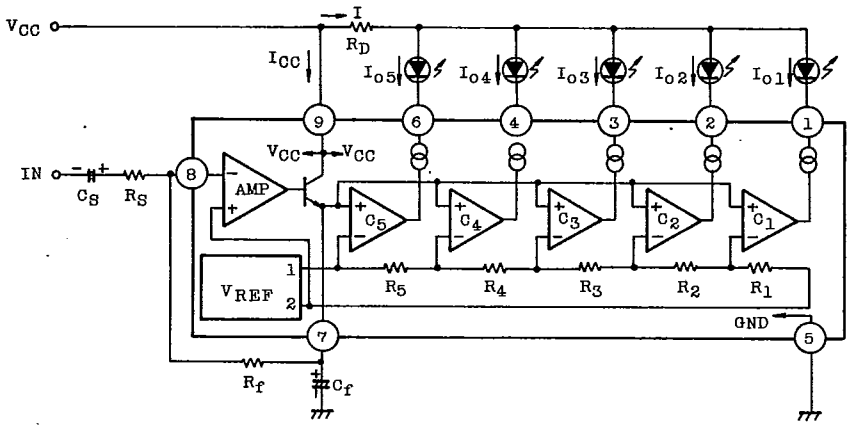

1. Setting of Turn-on Level

Turn-on input level can be set through changing the voltage gain (G_V) of the input amplifier. This voltage gain is determined by the external resistor (R_S,R_f) and obtained by the equation below.

$$G_V=20\log\frac{R_f}{R_S}$$ (Use in the range of $G_V=0\sim20$dB)

When $G_V=0$dB ($R_S=R_f=100k\Omega$), the turn-on level at fifth LED is 958.3mVrms(Typ.). For turning on the fifth LED with the arbitrarily set input level (V_{IN}), use the following equation to set R_S and R_f.

$$\frac{R_f}{R_S}=\frac{958.3\text{mV}_{rms}}{V_{IN}}$$ (Use the resistor of $R_f=56k\Omega$ or over)

2. Setting of Power Dissipation and Limiting Resistor

Since the output of this IC is driver by constant current, all the output current ($I_{O1\sim5}$) are dissipated in the IC. Therefore, set the limiting resistor (R_D) so that the power dissipation (P_D) may not exceed the maximum rating because of the ambient temperature.

$P_D=V_{CC}\cdot I_{CC}+(V_{CC}-R_D\cdot I-V_F)I_{O1}+\cdots\cdots+(V_{CC}-R_D\cdot I-V_F)I_{O5}$

Total output current; $I=I_{O1}+I_{O2}+I_{O3}+I_{O4}+I_{O5}$

LED forward voltage ; $V_F=1.5V$

TA7366P
TA7367P

I_{CC} – V_{CC}

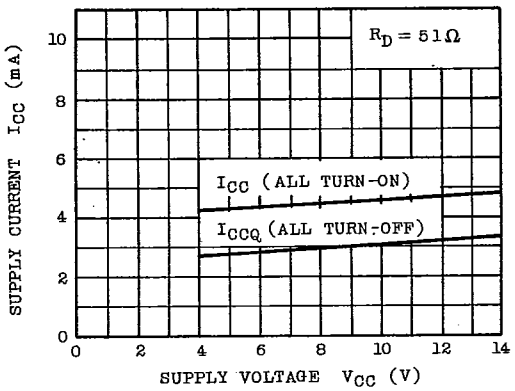

I_O – V_{CC}

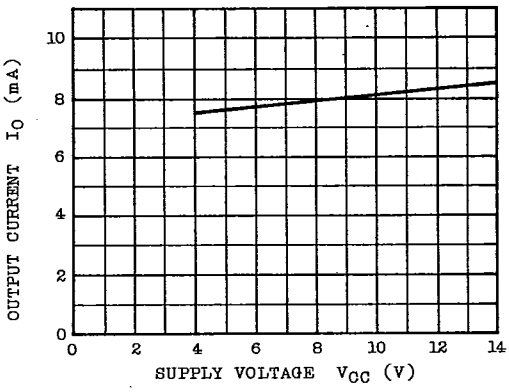

P_D – Ta

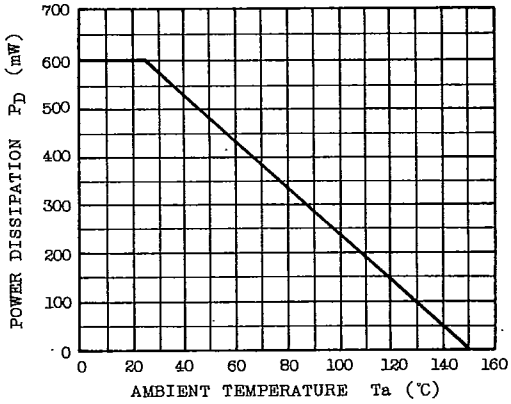

TA7366P
TA7367P

APPLICATION

RANGE EXTENSION (10 LEDs, TA7366P+TA7367P)

Intervals of Turn-ON Level (dB)	2	2	2	2	2	≒ 2	5	5	3	3
Turn-ON input levels (mV_{rms})	77.8	61.8	49.4	39.3	31.0	22.3	12.7	7.1	5.7	3.9

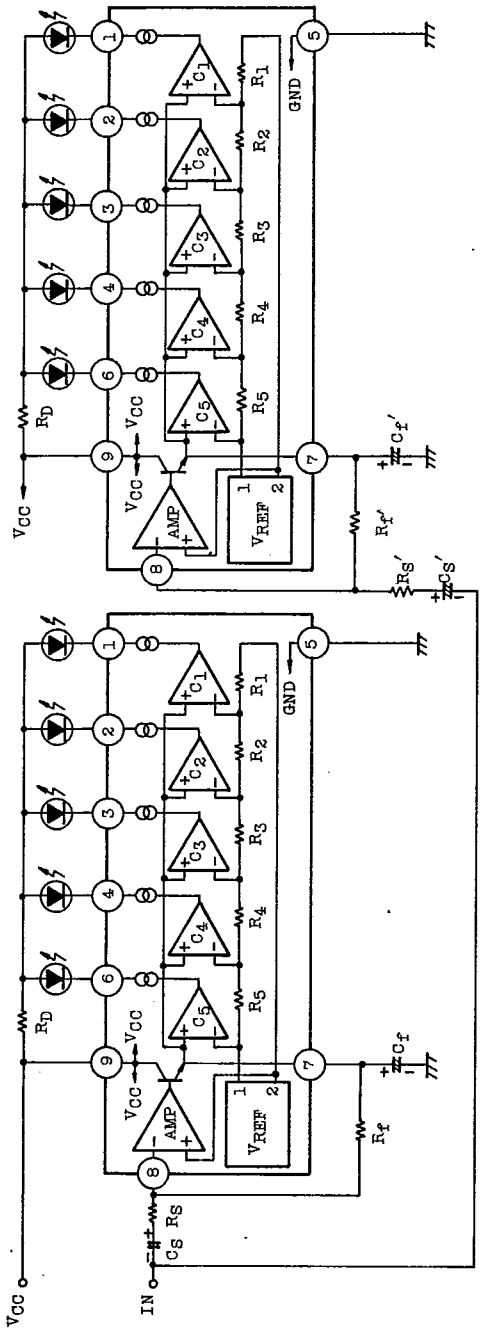

TA7367P

R_S=47kΩ, R_f=56kΩ
C_S=4.7μF, C_f=0.47μF

TA7366P

R_S'=20kΩ, R_f'=82kΩ
C_S'=4.7μF, C_f'=0.47μF