Ordering number: EN2323A

Thick Film Hybrid IC

STK4172II

AF Power Amplifier (Split Power Supply) (40W + 40W min, THD = 0.4%)

Features

- The STK4102II series (STK4172II) and STK4101V series (high-grade type) are pin-compatible in the output range of 6W to 50W and enable easy design.
- Small-sized package whose pin assignment is the same as that of the STK4101II series
- Built-in muting circuit to cut off various kinds of pop noise
- Greatly reduced heat sink due to substrate temperature 125°C guaranteed
- Excellent cost performance

Package Dimensions

unit: mm

4040

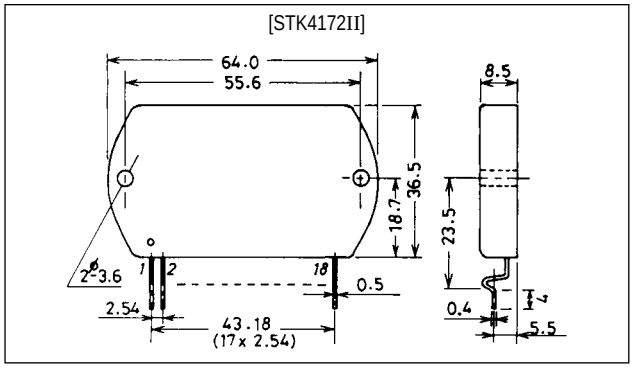

Specifications

Maximum Ratings at Ta = 25°C

Parameter	Symbol	Conditions	Ratings	Unit
Maximum supply voltage	V_{CC} max		±48	V
Thermal resistance	θj-c		1.8	°C/W
Junction Temperature	Tj		150	°C
Operating substrate temperature	Tc		125	°C
Storage temperature	Tstg		–30 to +125	°C
Available time for load short-circuit	ts	V_{CC} = ±32V, R_L = 8Ω, f = 50Hz, Po = 40W	2	s

Recommended Operating Conditions at Ta = 25°C

Parameter	Symbol	Conditions	Ratings	Unit
Recommended supply voltage	V_{CC}		±32	V
Load resistance	R_L		8	Ω

Operating Characteristics

at Ta = 25°C, V_{CC} = ±32V, R_L = 8Ω, Rg = 600Ω, VG = 40dB,
R_L : non-inductive load

Parameter	Symbol	Conditions	min	typ	max	Unit
Quiescent current	I_{CCO}	V_{CC} = ±38.5V	20	40	100	mA
Output power	P_O (1)	THD = 0.4%, f = 20Hz to 20kHz	40			W
	P_O (2)	V_{CC} = ±29V, THD = 1.0%, R_L = 4Ω, f = 1kHz	45			W
Total harmonic distortion	THD	P_O = 1.0W, f = 1kHz			0.3	%
Frequency response	f_L, f_H	P_O = 1.0W, $^{+0}_{-3}$ dB		20 to 50k		Hz
Input impedance	r_i	P_O = 1.0W, f = 1kHz		55		kΩ
Output noise voltage	V_{NO}	V_{CC} = ±38.5V, Rg = 10kΩ			1.2	mVrms
Neutral voltage	V_N	V_{CC} = ±38.5V	–70	0	+70	mV
Muting voltage	V_M		–2	–5	–10	V

Notes. For power supply at the time of test, use a constant-voltage power supply unless otherwise specified.
For measurement of the available time for load short-circuit and output noise voltage, use the specified transformer power supply shown right.
The output noise voltage is represented by the peak value on rms scale (VTVM) of average value indicating type. For AC power supply, use an AC stabilized power supply (50Hz) to eliminate the effect of flicker noise in AC primary line.

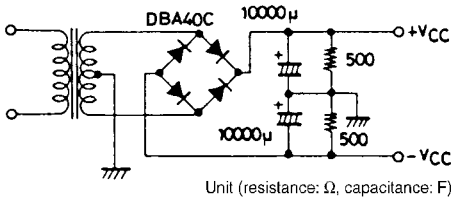

Specified Transformer Power Supply
(Equivalent to MG-200)

Equivalent Circuit

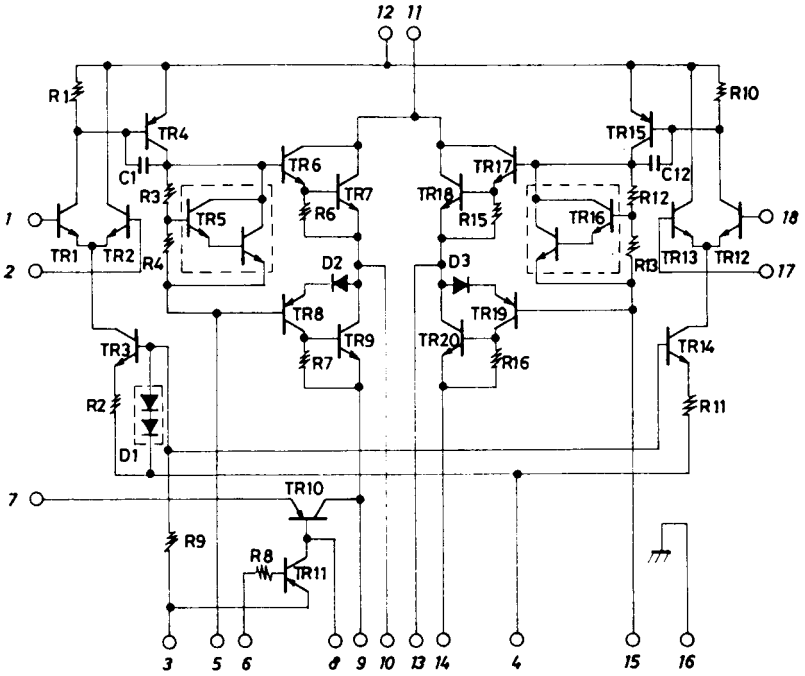

Sample Application Circuit (I) 40W min 2-channel AF power amplifier

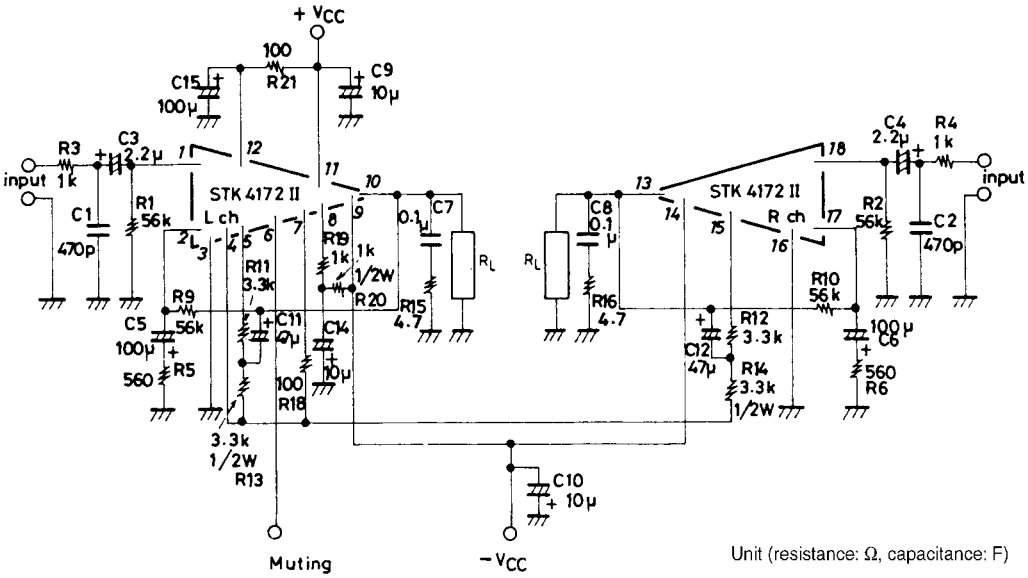

Sample Printed Circuit Pattern for Application Circuit (Cu-foiled side)

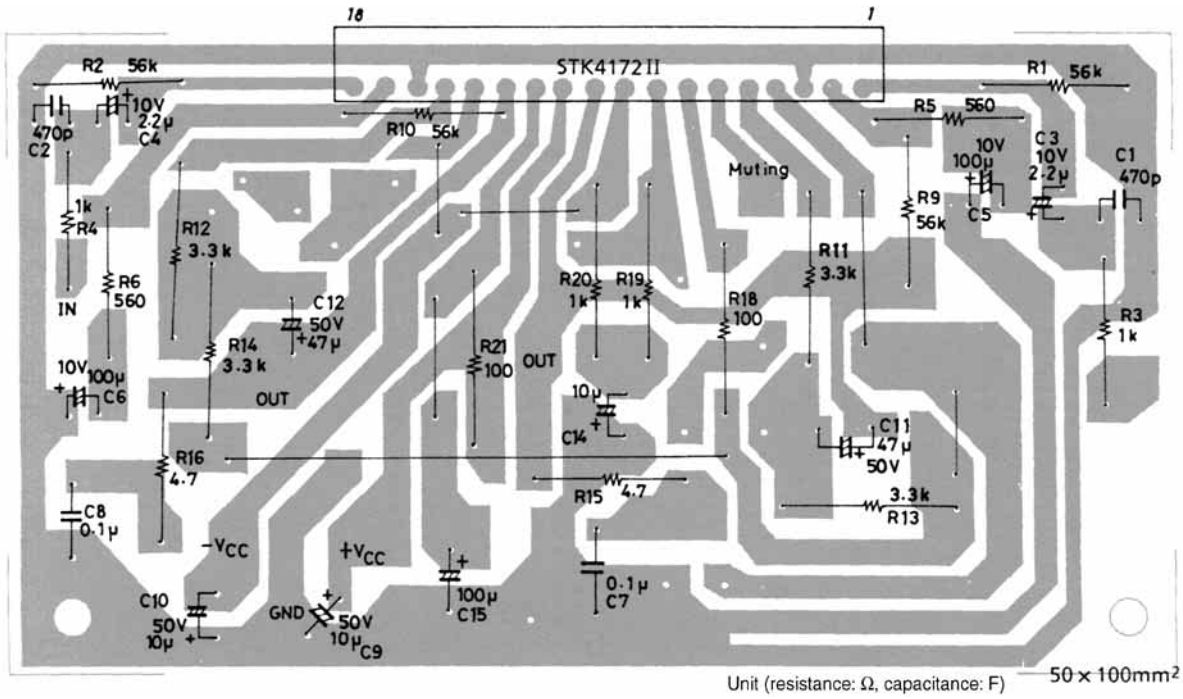

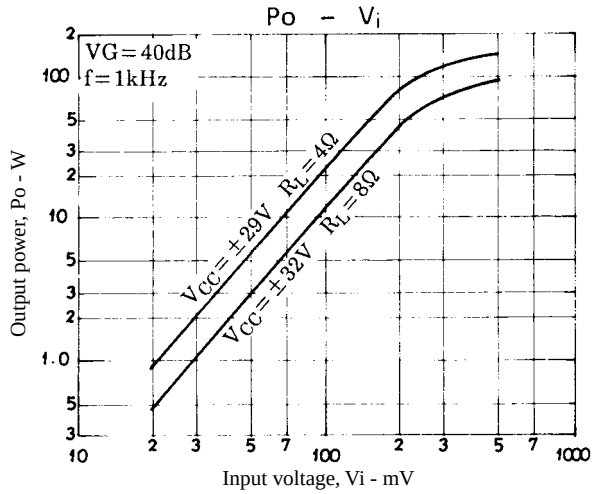
Po – Vi
VG=40dB
f=1kHz
VCC=±29V RL=4Ω
VCC=±32V RL=8Ω
Output power, Po - W
Input voltage, Vi - mV

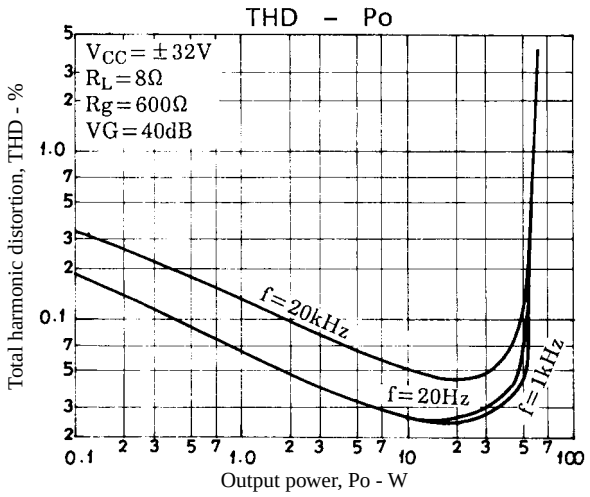
THD – Po
VCC=±32V
RL=8Ω
Rg=600Ω
VG=40dB
f=20kHz
f=20Hz
f=1kHz
Total harmonic distortion, THD - %
Output power, Po - W

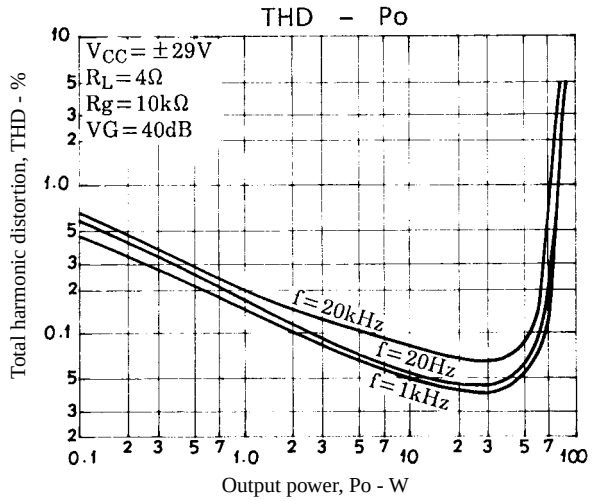
THD – Po
VCC=±29V
RL=4Ω
Rg=10kΩ
VG=40dB
f=20kHz
f=20Hz
f=1kHz
Total harmonic distortion, THD - %
Output power, Po - W

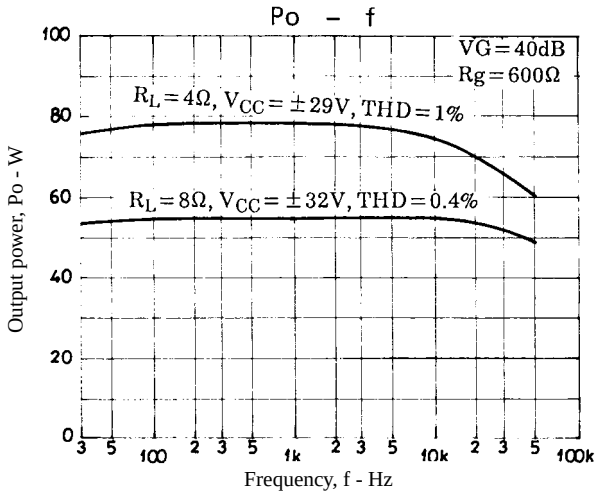
Po – f
VG=40dB
Rg=600Ω
RL=4Ω, VCC=±29V, THD=1%
RL=8Ω, VCC=±32V, THD=0.4%
Output power, Po - W
Frequency, f - Hz

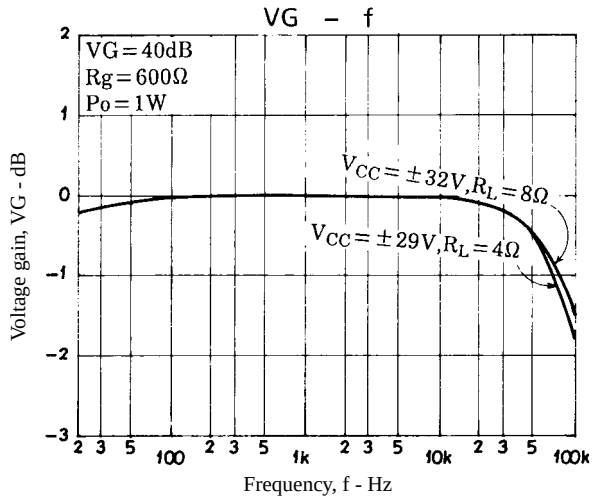
VG – f
VG=40dB
Rg=600Ω
Po=1W
VCC=±32V,RL=8Ω
VCC=±29V,RL=4Ω
Voltage gain, VG - dB
Frequency, f - Hz

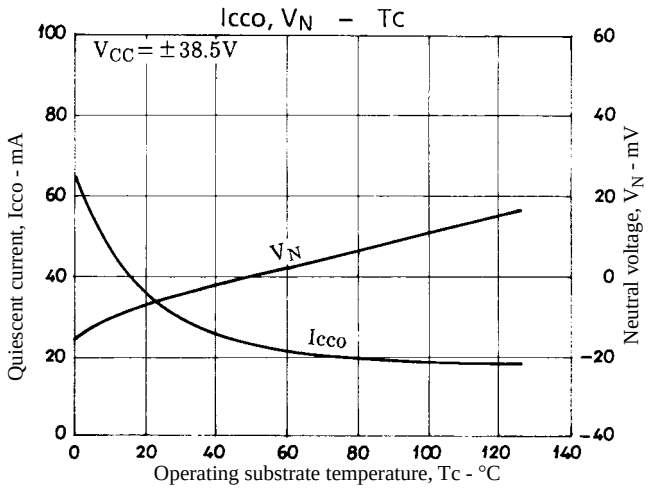
Icco, VN – Tc
VCC=±38.5V
VN
Icco
Quiescent current, Icco - mA
Neutral voltage, VN - mV
Operating substrate temperature, Tc - °C

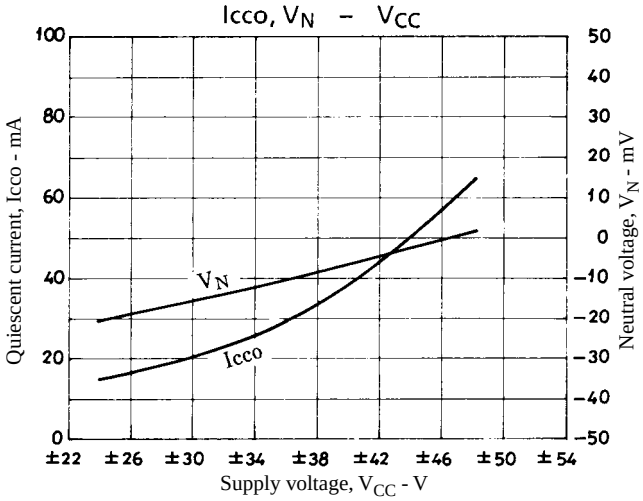
Icco, VN – VCC
Quiescent current, Icco - mA
Neutral voltage, VN - mV
VN
Icco
Supply voltage, VCC - V

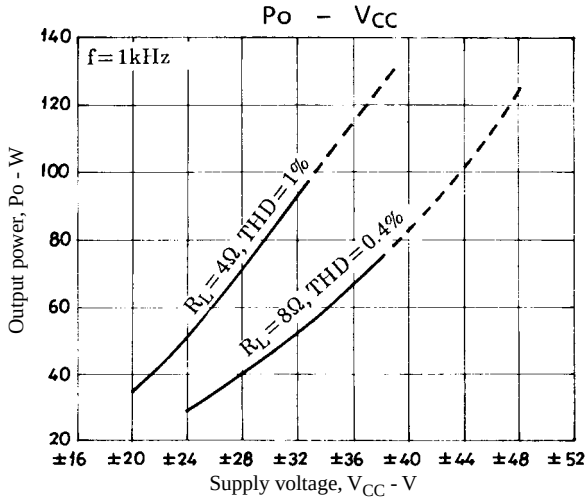
Po – VCC
f=1kHz
RL=4Ω, THD=1%
RL=8Ω, THD=0.4%
Output power, Po - W
Supply voltage, VCC - V

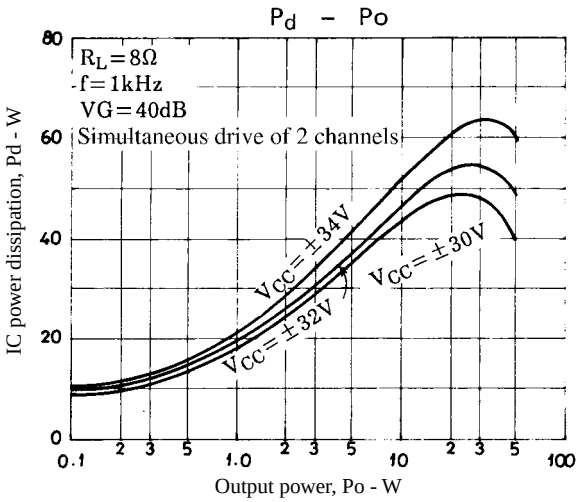
Pd – Po
RL=8Ω
f=1kHz
VG=40dB
Simultaneous drive of 2 channels
VCC=±34V
VCC=±32V
VCC=±30V
IC power dissipation, Pd - W
Output power, Po - W

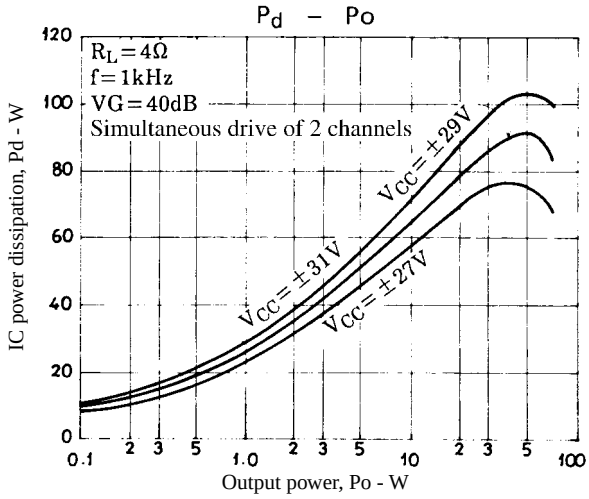
Pd – Po
RL=4Ω
f=1kHz
VG=40dB
Simultaneous drive of 2 channels
VCC=±29V
VCC=±31V
VCC=±27V
IC power dissipation, Pd - W
Output power, Po - W

Description of External Parts

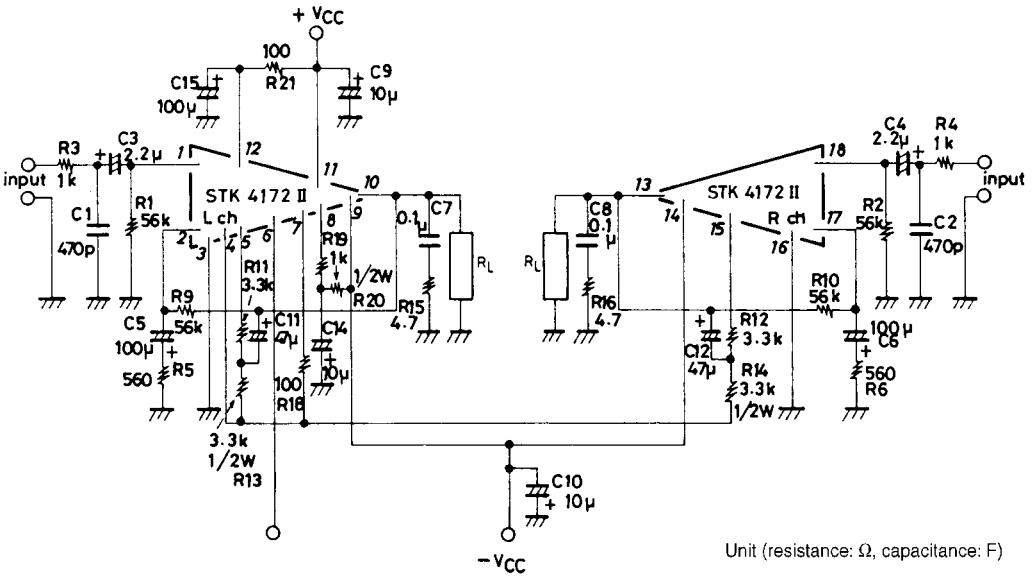

C1, C2	Input filter capacitors • A filter formed with R3 or R4 can be used to reduce noise at high frequencies.
C3, C4	Input coupling capacitors • Used to block DC current. When the reactance of the capacitor increases at low frequencies, the dependence of 1/f noise on signal source resistance causes the output noise to worsen. It is better to decrease the reactance. • To reduce the pop noise at the time of application of power, it is effective to increase C3, C4 that fix the time constant on the input side and to decrease C5, C6 on the NF side.
C5, C6	NF capacitors • These capacitors fix the low cutoff frequency as shown below. $f_L = \frac{1}{2\pi \cdot C5 \cdot R5}$ [Hz] To provide the desired voltage gain at low frequencies, it is better to increase C5. However, do not increase C5 more than needed because the pop noise level becomes higher at the time of application of power.
C15	Decoupling capacitor • Used to eliminate the ripple components that mix into the input side from the power line ($+V_{CC}$).
C11, C12	Bootstrap capacitors • When the capacitor value is decreased, the distortion is liable to be higher at low frequencies.
C9, C10	Oscillation blocking capacitors • Must be inserted as close to the IC power supply pins as possible so that the power supply impedance is decreased to operate the IC stably. • Electrolytic capacitors are recommended for C9, C10.
C14	Capacitor for ripple filter • Capacitor for the TR10-used ripple filter in the IC system
C7	Oscillation blocking capacitor • A polyester film capacitor, being excellent in temperature characteristic, frequency characteristic, is recommended for C7.
R3, R4	Resistors for input filter
R1, R2	Input bias resistors • Used to bias the input pin potential to zero. These resistors fix the input impedance practically.
R5, R9 (R6, R10)	These resistors fix voltage gain VG. It is recommended to use R5 (R6) = 560Ω, R9 (R10) = 56kΩ for VG = 40dB. • To adjust VG, it is desirable to change R5 (or R6). • When R5 (or R6) is changed to adjust VG, R1 (=R2) =R9 (=R10) must be set to ensure V_N balance.
R11, R13 (R12, R14)	Bootstrap resistors • The quiescent current is set by these resistors 3.3kΩ + 3.3kΩ. It is recommended to use this resistor value.
R21	Resistor for ripple filter • (Limiting resistor for predriver transistor at the time of load short)
R18	Used to ensure plus/minus balance at the time of clip.
R19, R20	Resistor for ripple filter • When muting TR11 is turned ON, current flows from ground to $-V_{CC}$ through TR 11. It is recommended to use 1kΩ (1W) + 1kΩ (1W) allowing for the power that may be dissipated on that occasion.
R15, R16	Oscillation blocking resistors

Sample Application Circuit (II) (protection circuit and muting circuit)

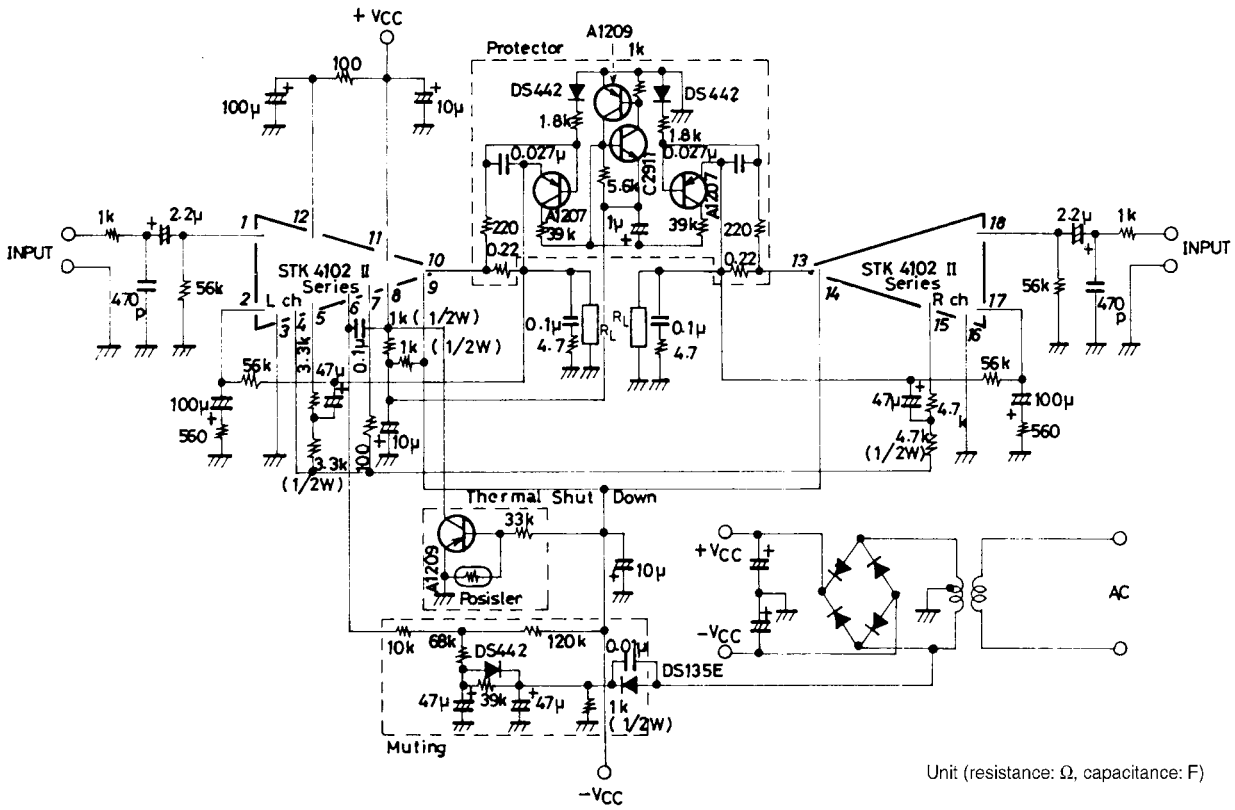

Thermal Design

The IC power dissipation of the STK4172II at the IC-operated mode is 55W max. at load resistance 8Ω and 91W max. at load resistance 4Ω (simultaneous drive of 2 channels) for continuous sine wave as shown in Figure 1 and 2.

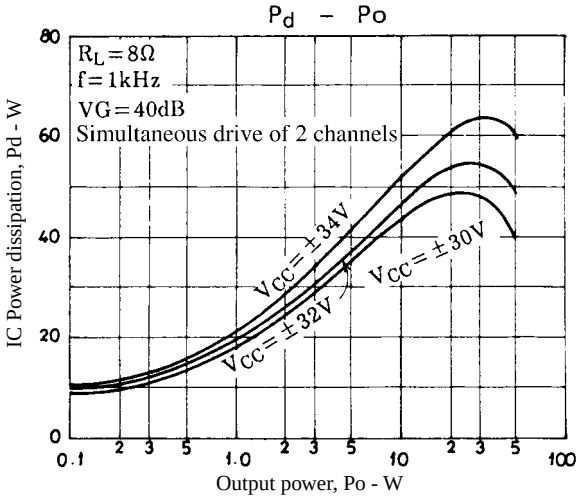

Figure 1. STK4172II Pd – Po (R_L = 8Ω)

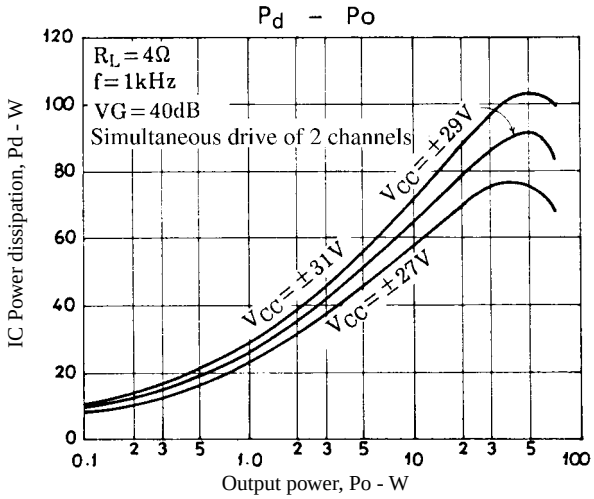

Figure 2. STK4172II Pd – Po (R_L = 4Ω)

In an actual application where a music signal is used, it is impractical to estimate the power dissipation based on the continuous signal as shown above, because too large a heat sink must be used. It is reasonable to estimate the power dissipation as 1/10 Po max. (EIAJ).
That is, Pd = 35W at 8Ω, Pd = 49W at 4Ω
Thermal resistance θc-a of a heat sink for this IC power dissipation (Pd) is fixed under conditions 1 and 2 shown below.

Condition 1: $Tc = Pd \times \theta c\text{-}a + Ta \leq 125°C$ ..... (1)
where Ta : Specified ambient temperature
Tc : Operating substrate temperature

Condition 2: $Tj = Pd \times (\theta c\text{-}a) + Pd/4 \times (\theta j\text{-}c) + Ta \leq 150°C$ ..... (2)
where Tj : Junction temperature of power transistor

Assuming that the power dissipation is shared equally among the four power transistors (2 channels × 2), thermal resistance θj-c is 1.8°C/W and

$$Pd \times (\theta c\text{-}a + 1.8/4) + Ta \leq 150°C \quad (3)$$

Thermal resistance θc-a of a heat sink must satisfy inequalities (1) and (3).
Figure 3 shows the relation between Pd and θc-a given from (1) and (3) with Ta as a parameter.

[Example] The thermal resistance of a heat sink is obtained when the ambient temperature specified for a stereo amplifier is 50°C.
Assuming $V_{CC} = \pm 32V$, $R_L = 8\Omega$,
$V_{CC} = \pm 29V$, $R_L = 4\Omega$,
$R_L = 8\Omega$: Pd1 = 35W at 1/10 Po max.
$R_L = 4\Omega$: Pd2 = 49W at 1/10 Po max.
The thermal resistance of a heat sink is obtained from Figure 3.
$R_L = 8\Omega$: θc-a1 = 2.15°C/W
$R_L = 4\Omega$: θc-a2 = 1.53°C/W
Tj when a heat sink is used is obtained from (3).
$R_L = 8\Omega$: Tj = 141°C
$R_L = 4\Omega$: Tj = 147°C

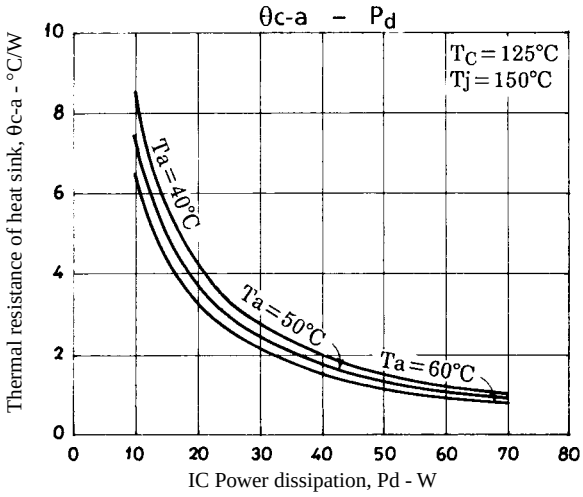

Figure 3. STK4172II θc-a – Pd

- No products described or contained herein are intended for use in surgical implants, life-support systems, aerospace equipment, nuclear power control systems, vehicles, disaster/crime-prevention equipment and the like, the failure of which may directly or indirectly cause injury, death or property loss.
- Anyone purchasing any products described or contained herein for an above-mentioned use shall:
  ① Accept full responsibility and indemnify and defend SANYO ELECTRIC CO., LTD., its affiliates, subsidiaries and distributors and all their officers and employees, jointly and severally, against any and all claims and litigation and all damages, cost and expenses associated with such use:
  ② Not impose any responsibility for any fault or negligence which may be cited in any such claim or litigation on SANYO ELECTRIC CO., LTD., its affiliates, subsidiaries and distributors or any of their officers and employees, jointly or severally.
- Information (including circuit diagrams and circuit parameters) herein is for example only; it is not guaranteed for volume production. SANYO believes information herein is accurate and reliable, but no guarantees are made or implied regarding its use or any infringements of intellectual property rights or other rights of third parties.

This catalog provides information as of July, 1997. Specifications and information herein are subject to change without notice.