M74LS253P

DUAL 4-LINE TO 1-LINE DATA SELECTOR/MULTIPLEXER WITH 3-STATE OUTPUT

DESCRIPTION

The M74LS253P is a semiconductor integrated circuit containing two 4-line to 1-line data selector/multiplexer circuits and 3-state outputs.

FEATURES

- Selection inputs common to both circuits
- Output control inputs separate for each circuit
- 3-state outputs
- Wide operating temperature range (T_a=−20~+75°C)

APPLICATION

General purpose, for use in industrial and consumer equipment.

FUNCTIONAL DESCRIPTION

This IC has two data selector circuits which provide 1-line selection of 4 input signal using two multiplexer circuits which convert the 4-bit parallel data into serial data by time-sharing. When 4-line signals are applied to the data inputs D_0, D_1, D_2 and D_3, and 1 data is specifed from among the data input by selection inputs S_A and S_B, the input signal is output at Y. By applying 4-bit parallel data to data inputs D_0, D_1, D_2 and D_3 and by connecting the output of a synchronous divide-by-four counter to S_A and S_B, data D_0, D_1, D_2 and D_3 appear in the order of D_0, D_1, D_2 and D_3, synchronized with the clock pulse. S_A and S_B are common to both circuits while output control inputs $\overline{1OC}$ and $\overline{2OC}$ are separate. When $\overline{1OC}$ and $\overline{2OC}$ are set high, 1Y and 2Y are put in the high-impedance state ("Z") irrespective of the status of the inputs.

M74LS253P has the same functions and pin connections as M74LS153P but the latter is provided with active pull-up resistor outputs.

PIN CONFIGURATION (TOP VIEW)

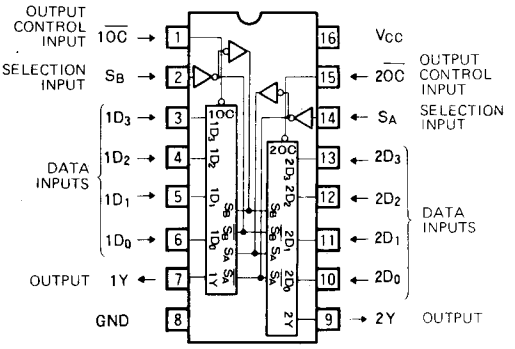

Outline 16P4

FUNCTION TABLE (Note 1)

S_B	S_A	D_0	D_1	D_2	D_3	$\overline{OC}$	Y
X	X	X	X	X	X	H	Z
L	L	L	X	X	X	L	L
L	L	H	X	X	X	L	H
L	H	X	L	X	X	L	L
L	H	X	H	X	X	L	H
H	L	X	X	L	X	L	L
H	L	X	X	H	X	L	H
H	H	X	X	X	L	L	L
H	H	X	X	X	H	L	H

Note 1 X : Irrelevant
Z : High-impedance state

BLOCK DIAGRAM

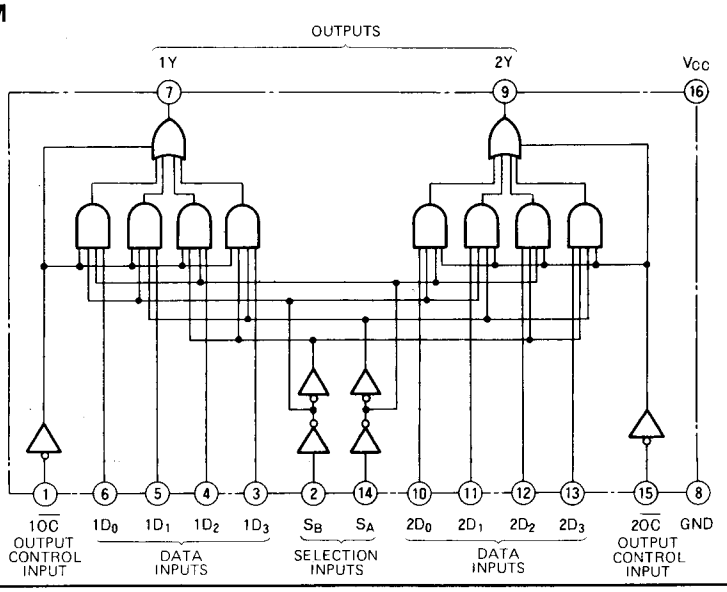

DUAL 4-LINE TO 1-LINE DATA SELECTOR/MULTIPLEXER WITH 3-STATE OUTPUT

ABSOLUTE MAXIMUM RATINGS (Ta = −20 ~ +75℃, unless otherwise noted)

Symbol	Parameter	Conditions	Limits	Unit
V_{CC}	Supply voltage		−0.5 ~ +7	V
V_I	Input voltage		−0.5 ~ +15	V
V_O	Output voltage	Off-state	−0.5 ~ +5.5	V
Topr	Operating free-air ambient temperature range		−20 ~ +75	℃
Tstg	Storage temperature range		−65 ~ +150	℃

RECOMMENDED OPERATING CONDITIONS (Ta = −20 ~ +75℃, unless otherwise noted)

Symbol	Parameter		Limits Min	Limits Typ	Limits Max	Unit
V_{CC}	Supply voltage		4.75	5	5.25	V
I_{OH}	High-level output current	$V_{OH} \geq 2.4V$	0		−2.6	mA
I_{OL}	Low-level output current	$V_{OL} \leq 0.4V$	0		4	mA
		$V_{OL} \leq 0.5V$	0		8	mA

ELECTRICAL CHARACTERISTICS (Ta = −20 ~ +75℃, unless otherwise noted)

Symbol	Parameter	Test conditions		Limits Min	Limits Typ *	Limits Max	Unit
V_{IH}	High-level input voltage			2			V
V_{IL}	Low-level input voltage					0.8	V
V_{IC}	Input clamp voltage	V_{CC}=4.75V, I_{IC}=−18mA				−1.5	V
V_{OH}	High-level output voltage	V_{CC}=4.75V, V_I=0.8V V_I= 2 V, I_{OH}=−2.6mA		2.4	3.1		V
V_{OL}	Low-level output voltage	V_{CC}=4.75V	I_{OL}= 4 mA		0.25	0.4	V
		V_I=0.8V, V_I= 2 V	I_{OL}= 8 mA		0.35	0.5	V
I_{OZH}	Off-state high-level output current	V_{CC}=5.25V, V_I= 2 V, V_O=2.7V				20	μA
I_{OZL}	Off-state low-level output current	V_{CC}=5.25V, V_I= 2 V, V_O=0.4V				−20	μA
I_{IH}	High-level input current	V_{CC}=5.25V, V_I=2.7V				20	μA
		V_{CC}=5.25V, V_I=10V				0.1	mA
I_{IL}	Low-level input current	V_{CC}=5.25V, V_I=0.4V				−0.4	mA
I_{OS}	Short-circuit output current (Note 2)	V_{CC}=5.25V, V_O= 0 V		−30		−130	mA
I_{CCL}	Supply current, all outputs low	V_{CC}=5.25V (Note 3)			7	12	mA
I_{CCZ}	Supply current, all outputs off	V_{CC}=5.25V (Note 4)			8.5	14	mA

* : All typical values are at V_{CC}=5V, T_a=25°C.
Note 2: All measurements should be done quickly and not more than one output should be shorted at a time.
Note 3: I_{CCL} is measured with all inputs at 0V.
Note 4: I_{CCZ} is measured with $1\overline{OC}$ and $2\overline{OC}$ at 4.5V and all other inputs at 0V.

SWITCHING CHARACTERISTICS (V_{CC}= 5 V, Ta = 25℃, unless otherwise noted)

Symbol	Parameter	Test conditions	Limits Min	Limits Typ	Limits Max	Unit
t_{PLH}	Low-to-high-level, high-to-low-level output propagation time, from inputs D_0 ~ D_3 to output Y	C_L= 15pF (Note 5)		8	25	ns
t_{PHL}				12	20	ns
t_{PLH}	Low-to-high-level, high-to-low-level output propagation time, from inputs S_A, S_B to output Y			12	45	ns
t_{PHL}				12	32	ns
t_{PZH}	Output enable time to high-level	R_L=2kΩ, C_L=15pF (Note 5)		11	28	ns
t_{PZL}	Output enable time to low-level	R_L=2kΩ, C_L=15pF (Note 5)		12	23	ns
t_{PHZ}	Output disable time from high-level	R_L=2kΩ, C_L=5pF (Note 5)		15	41	ns
t_{PLZ}	Output disable time from low-level	R_L=2kΩ, C_L=5pF (Note 5)		9	27	ns

Note 5: Measurement circuit

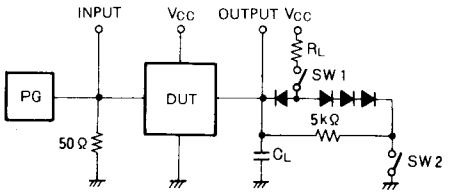

Symbol	SW 1	SW2
t_{PZH}	Open	Closed
t_{PZL}	Closed	Open
t_{PLZ}	Closed	Closed
t_{PHZ}	Closed	Closed

(1) The pulse generator (PG) has the following characteristics: PRR-1MHz, t_r=6ns, t_f=6ns, t_w=500ns, $V_P = 3V_{P.P}$, $Z_O = 50\Omega$.
(2) All diodes are switching diodes. ($t_{rr} \leqq 4$ns)
(3) C_L includes probe and jig capacitance.

TIMING DIAGRAM (Reference level = 1.3V)

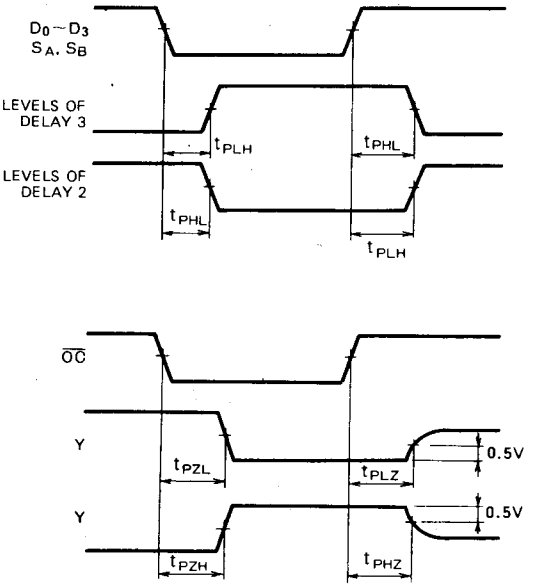

MITSUBISHI {DGTL LOGIC} 07E D 6249827 0013561 3
T-90-20

TYPE 14P4 14-PIN MOLDED PLASTIC DIL

Dimension in mm

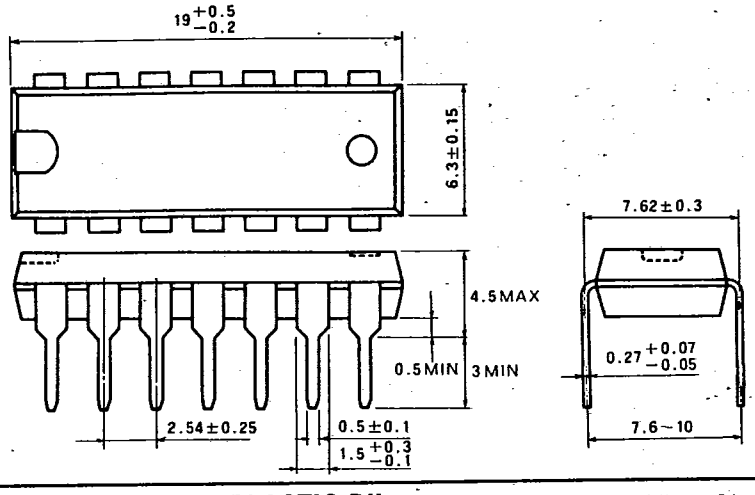

TYPE 16P4 16-PIN MOLDED PLASTIC DIL

Dimension in mm

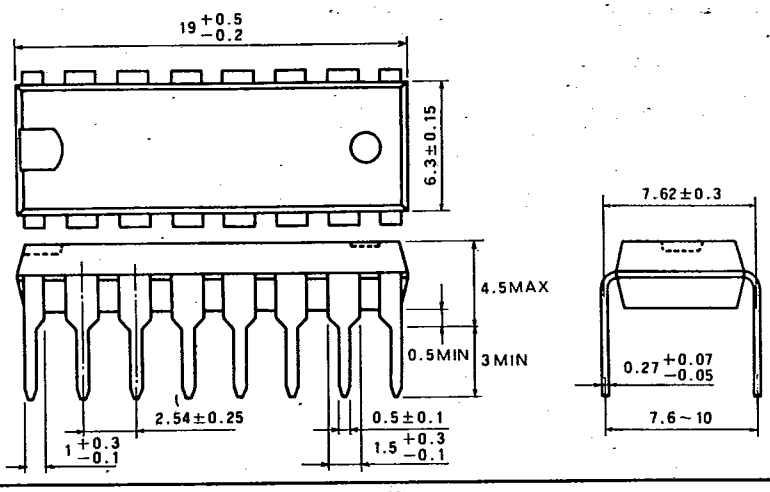

TYPE 20P4 20-PIN MOLDED PLASTIC DIL

Dimension in mm