M74LS241P

OCTAL BUFFER/LINE DRIVER WITH 3-STATE OUTPUT (NONINVERTED)

DESCRIPTION

The M74LS241P is a semiconductor integrated circuit containing 2 buffer blocks with 3-state non-inverted outputs and is provided with output control inputs which are common to 4 circuits and which are independent.

FEATURES

- Small input load factor (pnp input)
- Hysteresis provided (=400mV typical)
- High breakdown input voltage ($V_I \geqq 15V$)
- Complementary output control inputs ($1\overline{OC}$, 2OC)
- High fan-out 3-state outputs (I_{OL} = 24mA, I_{OH} = −15mA)
- Wide operating temperature range (T_a=−20~+75°C)

APPLICATION

General purpose, for use in industrial and consumer equipment.

PIN CONFIGURATION (TOP VIEW)

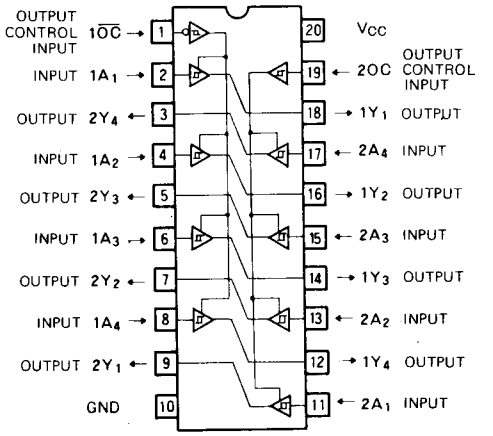

Outline 20P4

FUNCTIONAL DESCRIPTION

Since pnp transistors are used for the input circuits, the input load factor is small and a high breakdown input voltage is provided. The 3-state non-inverted output buffers have a high noise margin due to hysteresis.

When $1\overline{OC}$ is low, low appears in output Y if input 1A is low, and high appears in Y if 1A is high. When 2OC is high, low appears in output 2Y if input 2A is low and high appears in 2Y if 2A is high. All the outputs are put in a high-impedance state when $1\overline{OC}$ and 2OC are high and low, respectively.

The device can be used as a 4-bit two-way bus driver by connecting $1\overline{OC}$ and 2OC, 1A and 2Y and also 2A and 1Y. The outputs can be terminated with load resistors of not less than 133 ohms.

CIRCUIT DIAGRAM (EACH BUFFER)

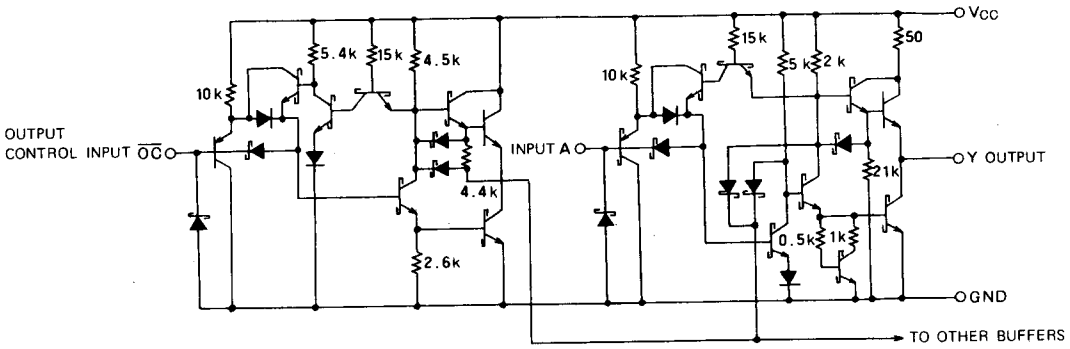

UNIT: Ω

OCTAL BUFFER/LINE DRIVER WITH 3-STATE OUTPUT (NONINVERTED)

FUNCTION TABLE (Note 1)

1A	$1\overline{OC}$	1Y
L	L	L
H	L	H
X	H	Z

2A	2OC	2Y
L	H	L
H	H	H
X	L	Z

Note 1 Z : High-impedance
X : irrelevant

ABSOLUTE MAXIMUM RATINGS ($T_a = -20 \sim +75°C$, unless otherwise noted)

Symbol	Parameter	Conditions	Limits	Unit
V_{CC}	Supply voltage		−0.5 ~ +7	V
V_I	Input voltage		−0.5 ~ +15	V
V_O	Output voltage	Off-state	−0.5 ~ +5.5	V
Topr	Operating free-air ambient temperature range		−20 ~ +75	°C
Tstg	Storage temperature range		−65 ~ +150	°C

RECOMMENDED OPERATING CONDITIONS ($T_a = -20 \sim +75°C$, unless otherwise noted)

Symbol	Parameter		Limits Min	Limits Typ	Limits Max	Unit
V_{CC}	Supply voltage		4.75	5	5.25	V
I_{OH}	High-level output current	$V_{OH} \geq 2.4V$	0		−3	mA
		$V_{OH} \geq 2V$	0		−15	mA
I_{OL}	Low-level output current	$V_{OL} \leq 0.4V$	0		12	mA
		$V_{OL} \leq 0.5V$	0		24	mA

ELECTRICAL CHARACTERISTICS ($T_a = -20 \sim +75°C$, unless otherwise noted)

Symbol	Parameter	Test conditions		Limits Min	Limits Typ *	Limits Max	Unit
V_{IH}	High-level input voltage			2			V
V_{IL}	Low-level input voltage					0.8	V
$V_{T+}-V_{T-}$	Hysteresis width	$V_{CC}=4.75V$		0.2	0.4		V
V_{IC}	Input clamp voltage	$V_{CC}=4.75V$, $I_{IC}=-18mA$				−1.5	V
V_{OH}	High-level output voltage	$V_{CC}=4.75V$	$V_I=0.8V$, $I_{OH}=-3mA$	2.4	3.1		V
		$V_I=2V$	$V_I=0.5V$, $I_{OH}=-15mA$	2			V
V_{OL}	Low-level output voltage	$V_{CC}=4.75V$	$I_{OL}=12mA$		0.25	0.4	V
		$V_I=0.8V$, $V_I=2V$	$I_{OL}=24mA$		0.35	0.5	V
I_{OZH}	Off-state high-level output current	$V_{CC}=5.25V$, $V_I=2V$, $V_O=2.7V$				20	μA
I_{OZL}	Off-state low-level output current	$V_{CC}=5.25V$, $V_I=2V$, $V_O=0.4V$				−20	μA
I_{IH}	High-level input current	$V_{CC}=5.25V$, $V_I=2.7V$				20	μA
		$V_{CC}=5.25V$, $V_I=10V$				0.1	mA
I_{IL}	Low-level input current	$V_{CC}=5.25V$, $V_I=0.4V$				−0.2	mA
I_{OS}	Short-circuit output current (Note 2)	$V_{CC}=5.25V$, $V_O=0V$		−40		−225	mA
I_{CCH}	Supply current, all outputs high	$V_{CC}=5.25V$, $V_I=0V$, $V_I=4.5V$			17	27	mA
I_{CCL}	Supply current, all outputs low	$V_{CC}=5.25V$, $V_I=0V$, $V_I=4.5V$			27	46	mA
I_{CCZ}	Supply current, all outputs disabled	$V_{CC}=5.25V$, $V_I=0V$, $V_I=4.5V$			32	54	mA

* : All typical values are at V_{CC} = 5V, T_a = 25°C.
Note 2: All measurements should be done quickly, and not more than one output should be shorted at a time.

OCTAL BUFFER/LINE DRIVER WITH 3-STATE OUTPUT (NONINVERTED)

SWITCHING CHARACTERISTICS (V_{CC} = 5V, Ta = 25°C, unless otherwise noted)

Symbol	Parameter	Test conditions	Limits Min	Limits Typ	Limits Max	Unit
t_{PLH}	Low-to-high-level, high-to-low-level output propagation time, from input A to output Y	C_L = 45pF (Note 3)		8	18	ns
t_{PHL}				9	18	ns
t_{PZL}	Output enable time to low-level	R_L = 667Ω, C_L = 45pF (Note 3)		15	30	ns
t_{PZH}	Output enable time to high-level	R_L = 667Ω, C_L = 45pF (Note 3)		12	40	ns
t_{PLZ}	Output disable time from low-level	R_L = 667Ω, C_L = 5 pF (Note 3)		11	25	ns
t_{PHZ}	Output disable time from high-level	R_L = 667Ω C_L = 5 pF (Note 3)		12	18	ns

Note 3: Measurement circuit

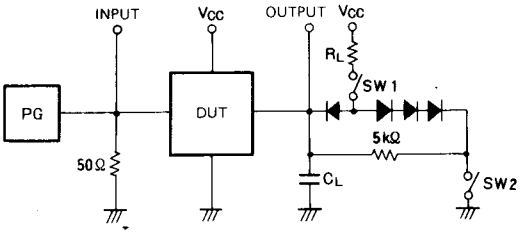

Symbol	SW 1	SW2
t_{PZH}	Open	Closed
t_{PZL}	Closed	Open
t_{PLZ}	Closed	Closed
t_{PHZ}	Closed	Closed

(1) The pulse generator (PG) has the following characteristics:
PRR = 1MHz, t_r = 6ns, t_f = 6ns, t_w = 500ns, V_P = $3V_{P.P}$, Z_o = 50Ω.
(2) All diodes are switching diodes ($t_{rr} \leq$ 4ns)
(3) C_L includes probe and jig capacitance.

TIMING DIAGRAM (Reference level = 1.3V)

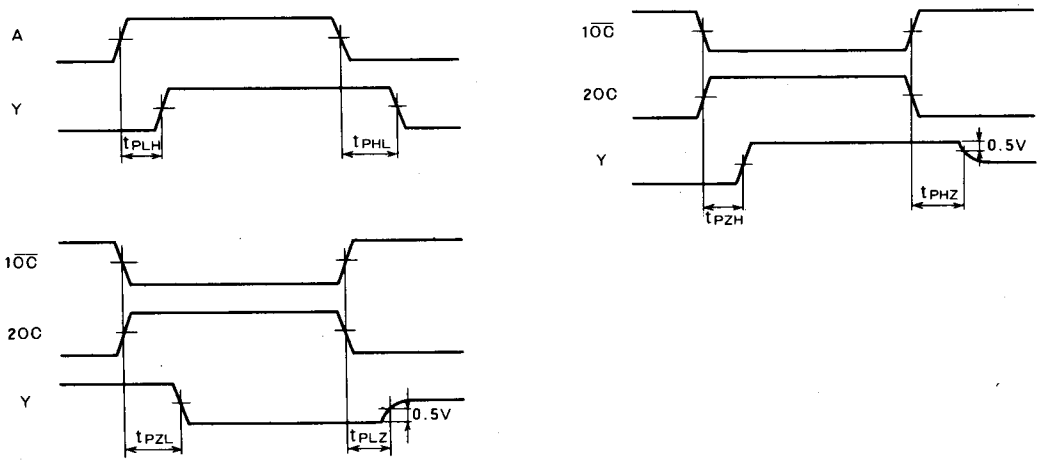

OCTAL BUFFER/LINE DRIVER WITH 3-STATE OUTPUT (NONINVERTED)

TYPICAL CHARACTERISTICS

OUTPUT VOLTAGE VS INPUT VOLTAGE

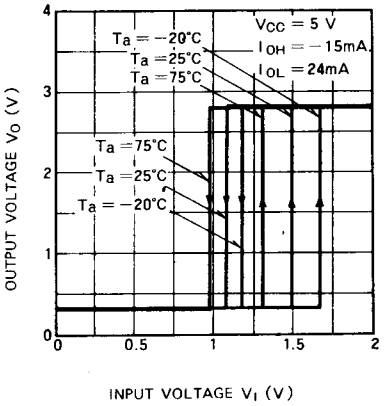

HIGH-LEVEL OUTPUT VOLTAGE VS HIGH-LEVEL OUTPUT CURRENT

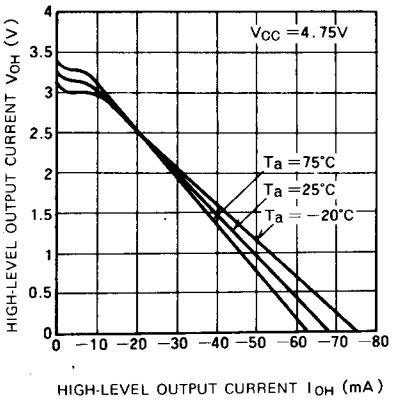

LOW-LEVEL OUTPUT VOLTAGE VS LOW-LEVEL OUTPUT CURRENT

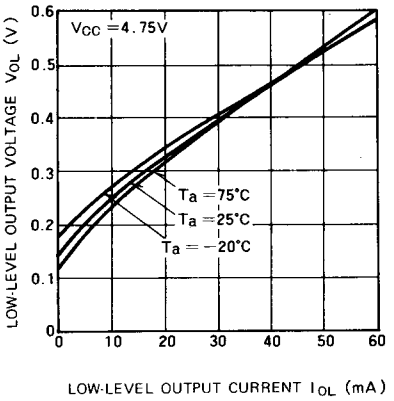

MITSUBISHI {DGTL LOGIC} 07E D 6249827 0013561 3
T-90-20

TYPE 14P4 14-PIN MOLDED PLASTIC DIL

Dimension in mm

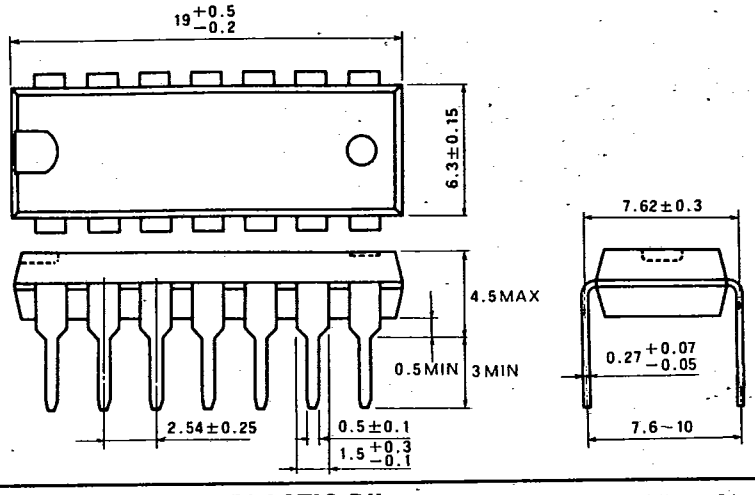

TYPE 16P4 16-PIN MOLDED PLASTIC DIL

Dimension in mm

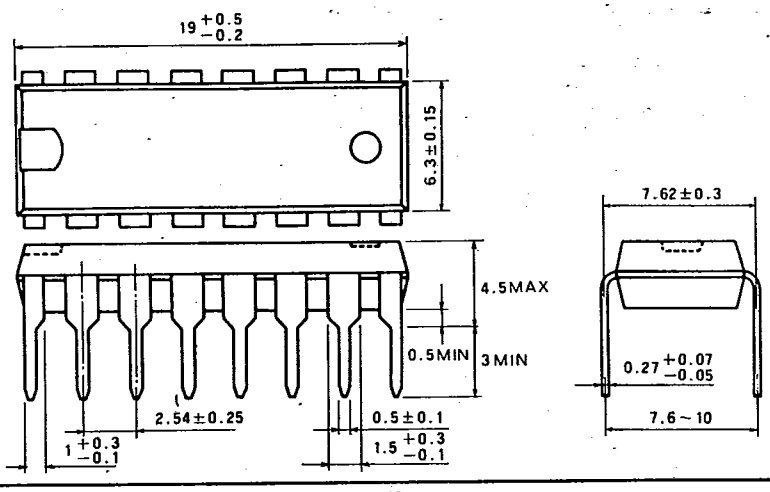

TYPE 20P4 20-PIN MOLDED PLASTIC DIL

Dimension in mm