Smart High-Side Power Switch for Industrial Applications 1 Channel: 1 x 200mΩ

Features

- Short circuit protection
- Current limitation
- Overload protection
- Overvoltage protection (including load dump)
- Undervoltage shutdown with auto-restart and hysteresis
- Switching inductive loads
- Clamp of negative voltage at output with inductive loads
- CMOS compatible input
- Thermal shutdown with restart
- ESD - Protection
- Loss of GND and loss of V_{bb} protection
- Very low standby current
- Reverse battery protection with external resistor
- Improved electromagnetic compatibility (EMC)

Product Summary

Overvoltage protection	$V_{bb(AZ)}$	47	V
Operating voltage	$V_{bb(on)}$	12...45	V
On-state resistance	R_{ON}	200	mΩ
Operating temperature	T_a	-30...+85	°C

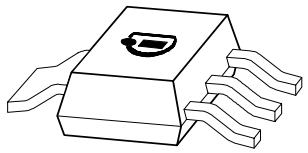

PG-SOT223

Application

- All types of resistive, inductive and capacitive loads
- µC compatible power switch for 12 V and 24 V DC industrial applications
- Replaces electromechanical relays and discrete circuits

General Description

N channel vertical power FET with charge pump, ground referenced CMOS compatible input, monolithically integrated in Smart SIPMOS® technology.
Providing embedded protective functions.

Block Diagram

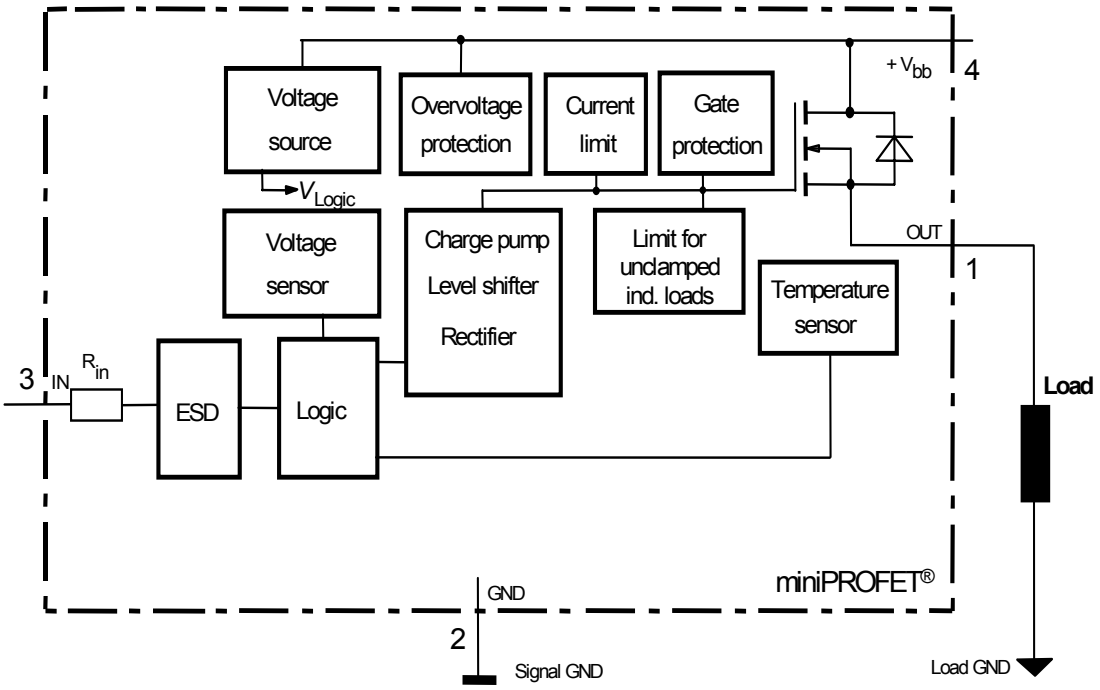

Pin	Symbol	Function
1	OUT	Output to the load
2	GND	Logic ground
3	IN	Input, activates the power switch in case of logic high signal
4	Vbb	Positive power supply voltage

Maximum Ratings

Parameter at T_j = 25°C, unless otherwise specified	**Symbol**	**Value**	**Unit**
Supply voltage	V_{bb}	-0,3[1)]...48	V
Continuous input voltage[2)]	V_{IN}	-10...V_{bb}	
Load current (Short - circuit current, see page 5)	I_L	self limited	A
Current through input pin (DC)	I_{IN}	±5	mA
Reverse current through GND-pin[3)]	$-I_{GND}$	-0.5	A
Junction temperature	T_j	internal limited	°C
Operating temperature	T_a	-30...+85	°C
Storage temperature	T_{stg}	-40 ... +105	°C
Power dissipation [4)]	P_{tot}	1.4	W
Inductive load switch-off energy dissipation[4)5)] single pulse T_j = 125 °C, I_L = 0.5 A	E_{AS}	0.7	J
Load dump protection[5)] $V_{LoadDump}$[6)]= V_A + V_S R_I=2Ω, t_d=400ms, V_{IN}= low or high, V_A=13,5V R_L = 47 Ω	$V_{Loaddump}$	83	V
Electro**s**tatic **d**ischarge voltage (Human Body Model) according to ANSI EOS/ESD - S5.1 - 1993 ESD STM5.1 - 1998 Input pin All other pins	V_{ESD}	 ±1 ±5	kV

[1]defined by P_{tot}

[2]At V_{IN} > Vbb, the input current is not allowed to exceed ±5 mA.

[3]defined by P_{tot}

[4]Device on 50mm*50mm*1.5mm epoxy PCB FR4 with 6 cm2 (one layer, 70µm thick) copper area for V_{bb} connection. PCB is vertical without blown air.

[5]not subject to production test, specified by design

[6]$V_{Loaddump}$ is setup without the DUT connected to the generator per ISO 7637-1 and DIN 40839 .
Supply voltages higher than $V_{bb(AZ)}$ require an external current limit for the GND pin, e.g. with a 150Ω resistor in GND connection. A resistor for the protection of the input is integrated.

Electrical Characteristics

Parameter at T_j = -40...125 °C, V_{bb} = 15...30 V unless otherwise specified	Symbol	Values			Unit
		min.	typ.	max.	
Thermal Characteristics					
Thermal resistance @ min. footprint	$R_{th(JA)}$	-	-	125	K/W
Thermal resistance @ 6 cm^2 cooling area [1]	$R_{th(JA)}$	-	-	70	
Thermal resistance, junction - soldering point	R_{thJS}	-	-	7	K/W
Load Switching Capabilities and Characteristics					
On-state resistance T_j = 25 °C, I_L = 0.5 A T_j = 125 °C	R_{ON}	 - -	 150 270	 200 320	mΩ
Nominal load current[2] Device on PCB [1]	$I_{L(nom)}$	0.7	-	-	A
Turn-on time to 90% V_{OUT} R_L = 47 Ω, V_{IN} = 0 to 10 V	t_{on}	-	50	100	µs
Turn-off time to 10% V_{OUT} R_L = 47 Ω, V_{IN} = 10 to 0 V	t_{off}	-	75	150	
Slew rate on 10 to 30% V_{OUT}, R_L = 47 Ω, V_{bb} = 15 V	dV/dt_{on}	-	1	2	V/µs
Slew rate off 70 to 40% V_{OUT}, R_L = 47 Ω, V_{bb} = 15 V	$-dV/dt_{off}$	-	1	2	

[1] Device on 50mm*50mm*1.5mm epoxy PCB FR4 with 6 cm2 (one layer, 70µm thick) copper area for V_{bb} connection. PCB is vertical without blown air.

[2] Nominal load current is limited by the current limitation (see page 5)

Electrical Characteristics

Parameter at T_j = -40...125 °C, V_{bb} = 15...30 V unless otherwise specified	Symbol	Values			Unit
		min.	typ.	max.	
Operating Parameters					
Operating voltage	$V_{bb(on)}$	12	-	45	V
Undervoltage shutdown	$V_{bb(under)}$	7	-	10.5	
Undervoltage restart	$V_{bb(u\ rst)}$	-	-	11	
Undervoltage hysteresis $\Delta V_{bb(under)} = V_{bb(u\ rst)} - V_{bb(under)}$	$\Delta V_{bb(under)}$	-	0.5	-	
Standby current T_j = -40...85 °C, $V_{IN} \leq$ 1,2 V T_j = 125 °C[1)]	$I_{bb(off)}$	 - -	 10 -	 25 50	µA
Operating current	I_{GND}	-	1	1.6	mA
Leakage output current (included in $I_{bb(off)}$) $V_{IN} \leq$ 1,2 V	$I_{L(off)}$	-	3.5	10	µA
Protection Functions[2)]					
Initial peak short circuit current limit T_j = -40 °C, V_{bb} = 20 V, t_m = 150 µs T_j = 25 °C T_j = 125 °C	$I_{L(SCp)}$	 - - 0.7	 - 1.4 -	 2.1 - -	A
Repetitive short circuit current limit $T_j = T_{jt}$ (see timing diagrams)	$I_{L(SCr)}$	-	1.1	-	
Output clamp (inductive load switch off) at $V_{OUT} = V_{bb} - V_{ON(CL)}$, I_{bb} = 4 mA	$V_{ON(CL)}$	62	68	-	V
Overvoltage protection [3)] I_{bb} = 4 mA	$V_{bb(AZ)}$	47	-	-	
Thermal overload trip temperature[4)]	T_{jt}	135	-	-	°C
Thermal hysteresis	ΔT_{jt}	-	10	-	K

[1]higher current due temperature sensor

[2]Integrated protection functions are designed to prevent IC destruction under fault conditions described in the data sheet. Fault conditions are considered as "outside" normal operating range. Protection functions are not designed for continuous repetitive operation.

[3]see also $V_{ON(CL)}$ in circuit diagram

[4] higher operating temperature at normal function available

Electrical Characteristics

Parameter at T_j = -40...125 °C, V_{bb} = 15...30 V unless otherwise specified	Symbol	Values			Unit
		min.	typ.	max.	
Input					
Continuous input voltage[1]	V_{IN}	-10[2]	-	V_{bb}	V
Input turn-on threshold voltage	$V_{IN(T+)}$	-	-	3.0	
Input turn-off threshold voltage	$V_{IN(T-)}$	1.82	-	-	
Input threshold hysteresis	$\Delta V_{IN(T)}$	-	0.2	-	
Off state input current $V_{IN} \leq$ 1,8 V	$I_{IN(off)}$	 20	 -	 -	µA
On state input current	$I_{IN(on)}$	-	-	110	
Input delay time at switch on V_{bb}	$t_{d(Vbbon)}$	150	340	-	µs
Input resistance (see page 8)	R_I	1.5	3	5	kΩ

Reverse Battery					
Reverse battery voltage[3][2] R_{GND} = 0 Ω R_{GND} = 150 Ω	$-V_{bb}$	 - -	 - -	 0.3 45	V
Continuous reverse drain current[2] T_j = 25 °C	I_S	-	-	1	A
Drain-source diode voltage ($V_{OUT} > V_{bb}$) I_F = 1 A	$-V_{ON}$	-	0.6	1.2	V

[1] At V_{IN} > Vbb, the input current is not allowed to exceed ±5 mA.

[2] not subject to production test, guaranted by design

[3] defined by P_{tot}

EMC-Characteristics

All EMC-Characteristics are based on limited number of sampels and no part of production test.

Test Conditions:
If not other specified the test circuitry is the minimal functional configuration without any external components for protection or filtering.

Supply voltage:	V_{bb} = 13.5V	Temperature:	T_a = 23 ±5°C ;
Load:	R_L = 220Ω		
Operation mode:	PWM DC On/Off	Frequency:	100Hz / Duty Cycle: 50%
DUT-Specific.:	R_{GND}		

Fast electrical transients

Acc. ISO 7637

Test Pulse	Test Level	Test Results		Pulse Cycle Time and Generator Impedance
		On	Off	
1	-200 V	C	C	500ms ; 10Ω
2	+200 V	C	C	500ms ; 10Ω
3a	-200 V	C	C	100ms ; 50Ω
3b	+ 200 V	C	C	100ms ; 50Ω
4[1)]	-7 V	C	C	0,01Ω
5	175 V	E (70V)	E (70V)	400ms ; 2Ω

The test pulses are applied at V_{bb}

Definition of functional status

Class	Content
C	All functions of the device are performed as designed after exposure to disturbance.
E	One or more function of a device does not perform as designed after exposure and can not be returned to proper operation without repairing or replacing the device. The value after the character shows the limit.

Test circuit:

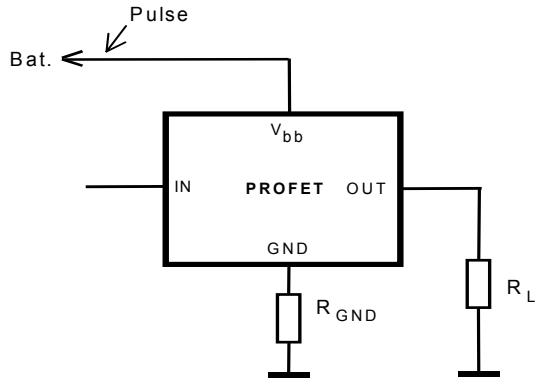

[1]Supply voltage V_{bb} = 12 V instead of 13,5 V.

Conducted Emission

Acc. IEC 61967-4 (1Ω / 150Ω method)

Typ. V_{bb}-Pin Emission at DC-On with 150Ω-matching network

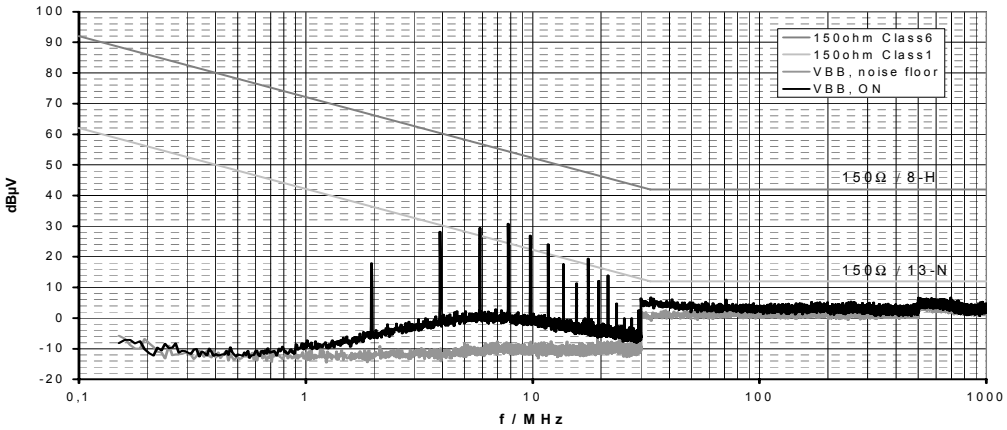

Typ. V_{bb}-Pin Emission at PWM-Mode with 150Ω-matching network

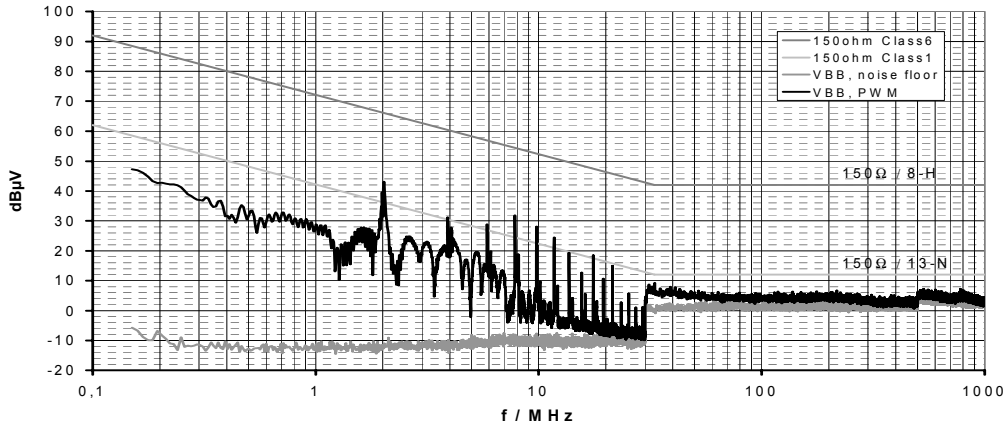

Test circuit:

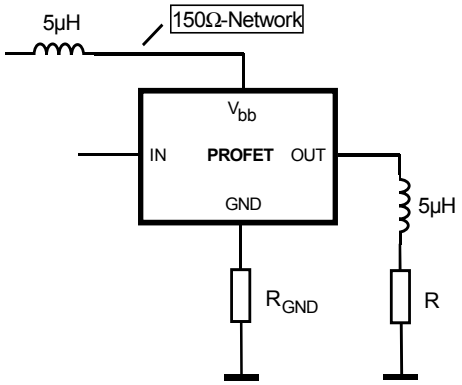

For defined decoupling and high reproducibility a defined choke (5µH at 1 MHz) is inserted between supply and V_{bb}-pin.

Conducted Susceptibility

Acc. 47A/658/CD IEC 62132-4 (Direct Power Injection)

Direct Power Injection: Forward Power CW
Failure criteria: Amplitude and frequency deviation max. 10% at Out

Typ. V_{bb}-Pin Susceptibility at DC-On/Off

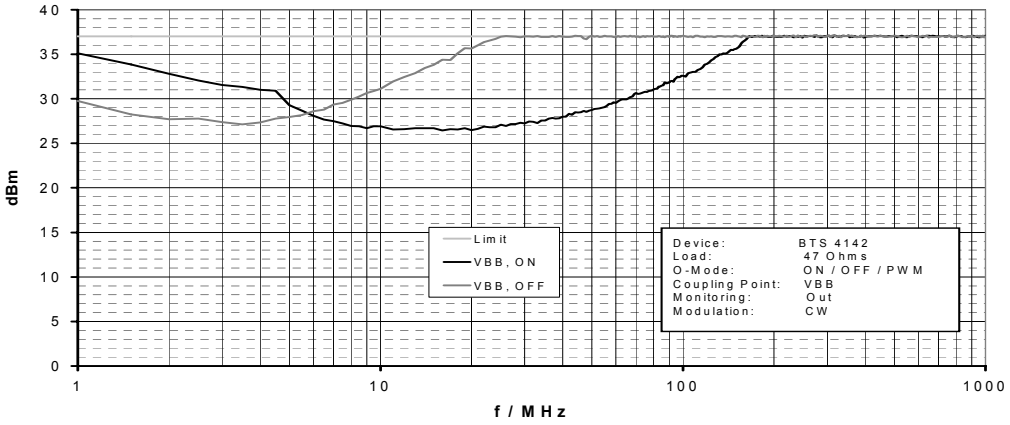

Typ. V_{bb}-Pin Susceptibility at PWM-Mode

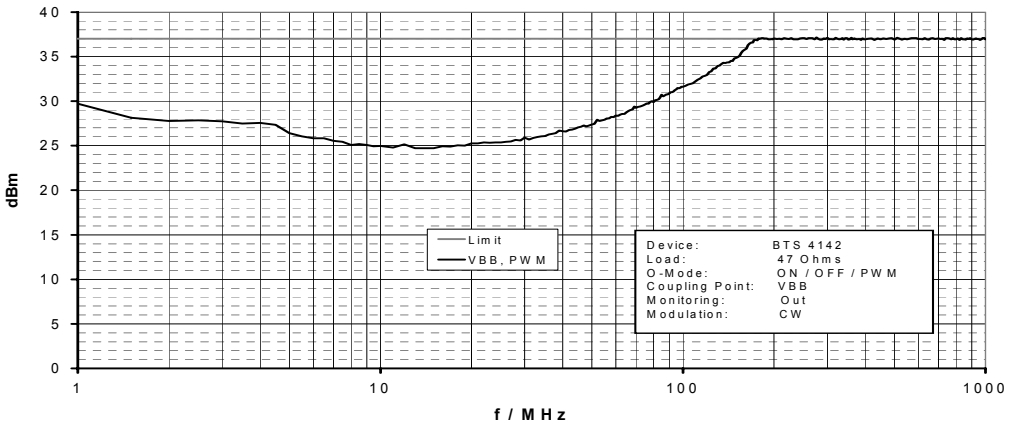

Test circuit:

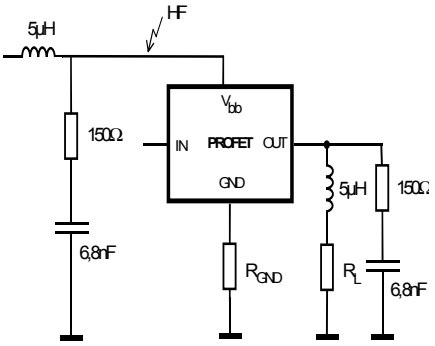

For defined decoupling and high reproducibility the same choke and the same 150Ω -matching network as for the emission measurement is used.

Terms

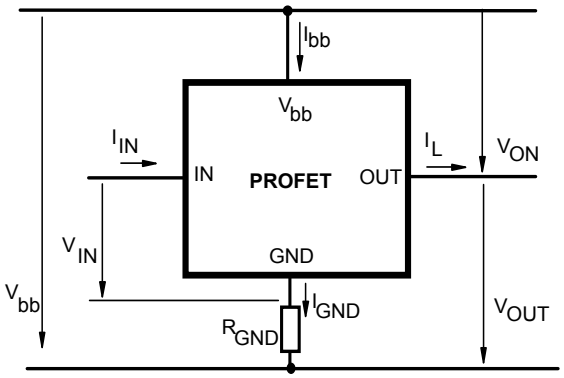

Inductive and overvoltage output clamp

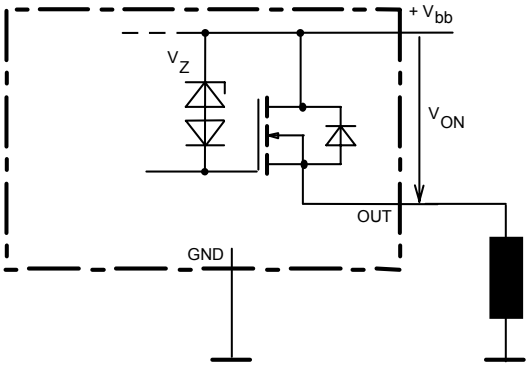

V_{ON} clamped to 63 V min.

Input circuit (ESD protection)

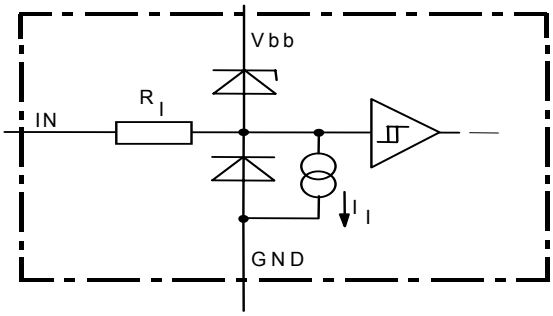

The use of ESD zener diodes as voltage clamp at DC conditions is not recommended

Overvoltage protection of logic part

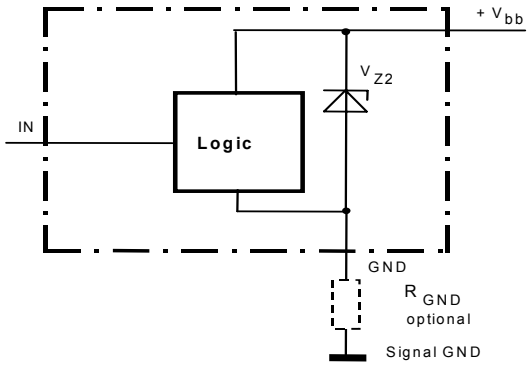

V_{Z2}=$V_{bb(AZ)}$=47V min.,
R_I=3 kΩ typ., R_{GND}=150Ω

Reverse battery protection

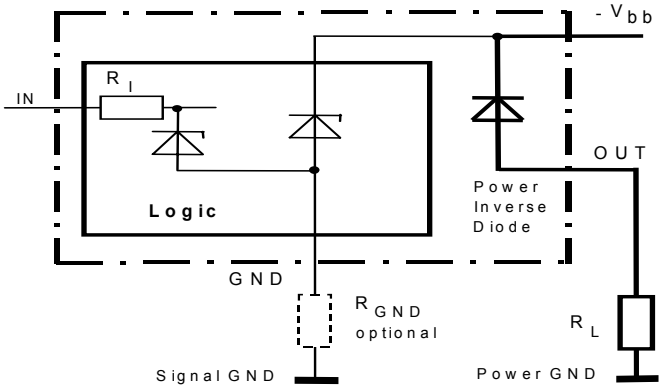

R_{GND}=150Ω, R_I=3kΩ typ.,
Temperature protection is not active during inverse current

GND disconnect

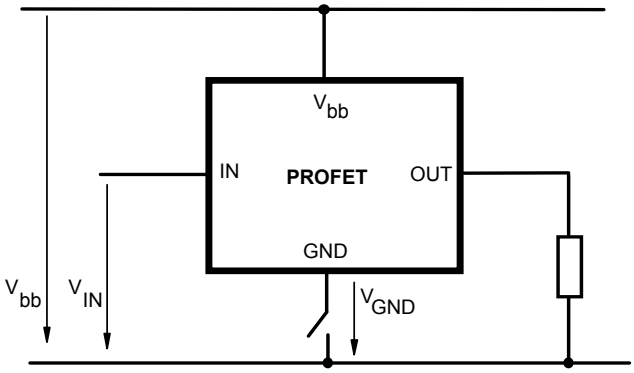

GND disconnect with GND pull up

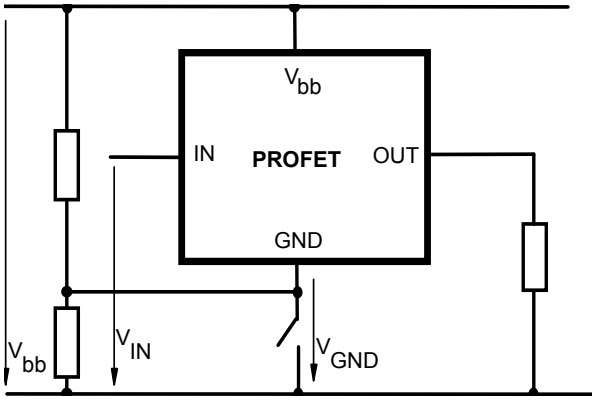

V_{bb} disconnect with charged inductive load

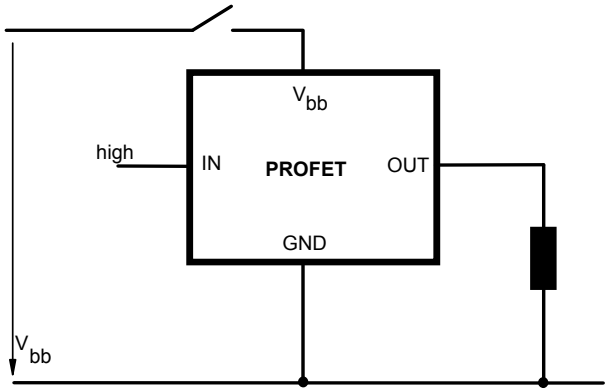

Inductive Load switch-off energy dissipation

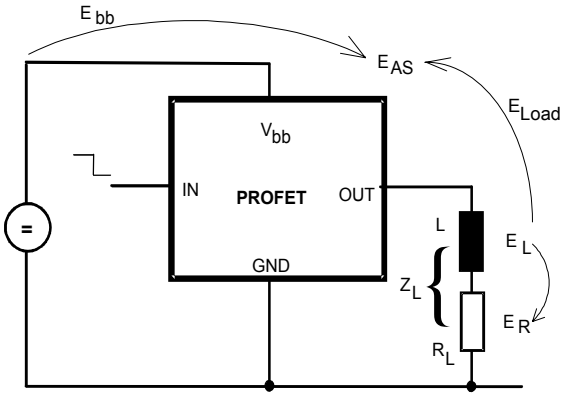

Energy stored in load inductance: $E_L = ½ * L * I_L^2$

While demagnetizing load inductance,
the enérgy dissipated in PROFET is
$E_{AS} = E_{bb} + E_L - E_R = V_{ON(CL)} * i_L(t)\, dt$,
with an approximate solution for $R_L > 0\Omega$:

$$E_{AS} = \frac{I_L * L}{2 * R_L} * (V_{bb} + |V_{OUT(CL)}|) * \ln\left(1 + \frac{I_L * R_L}{|V_{OUT(CL)}|}\right)$$

Typ. transient thermal impedance

Z_{thJA}=f(t_p) @ 6cm^2 heatsink area

Parameter: $D=t_p/T$

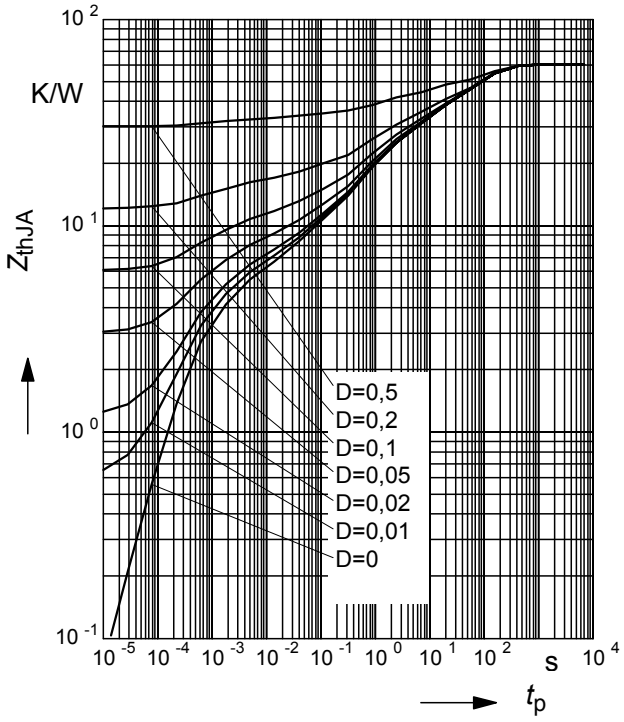

Typ. transient thermal impedance

Z_{thJA}=f(t_p) @ min. footprint

Parameter: $D=t_p/T$

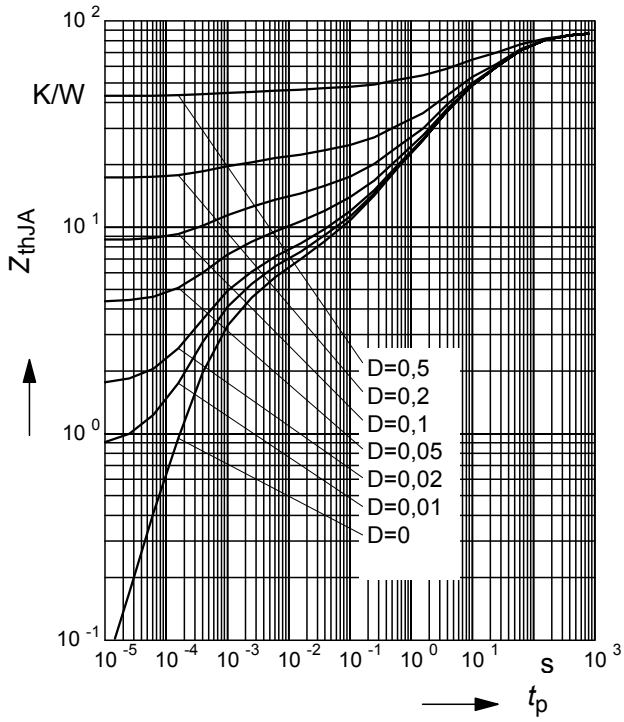

Typ. on-state resistance

R_{ON} = f(T_j) ; V_{bb} = 15 V ; V_{in} = high

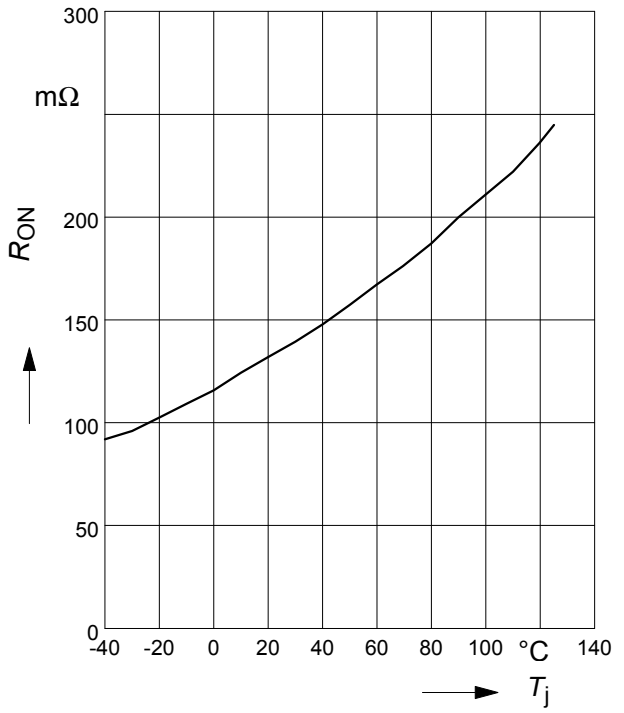

Typ. on-state resistance

R_{ON} = f(V_{bb}); I_L = 0.5A ; V_{in} = high

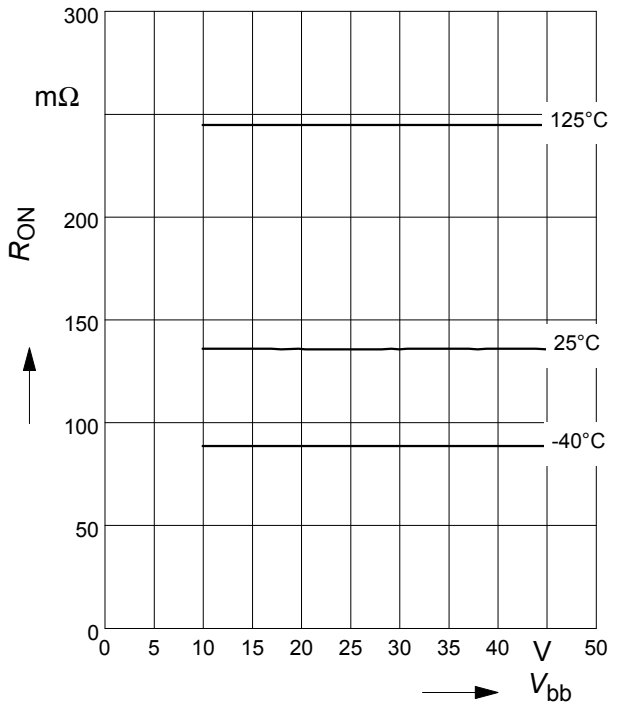

Typ. turn on time

t_{on} = f(T_j); R_L = 47Ω

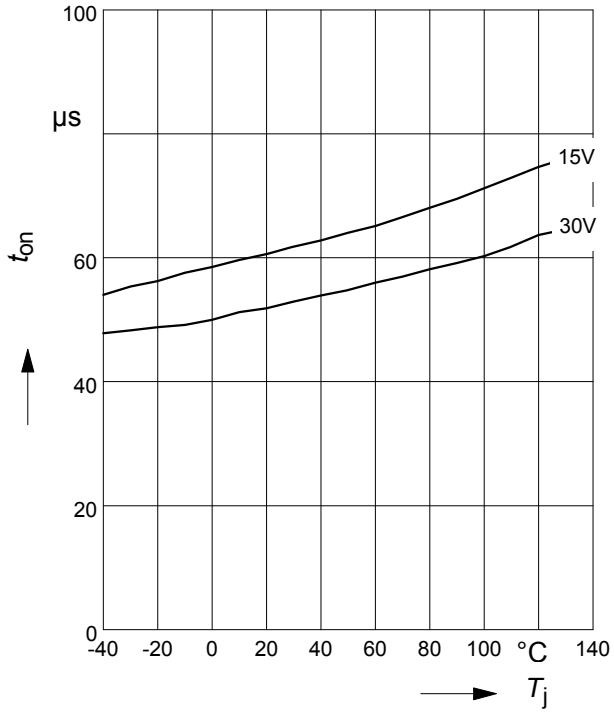

Typ. turn off time

t_{off} = f(T_j); R_L = 47Ω

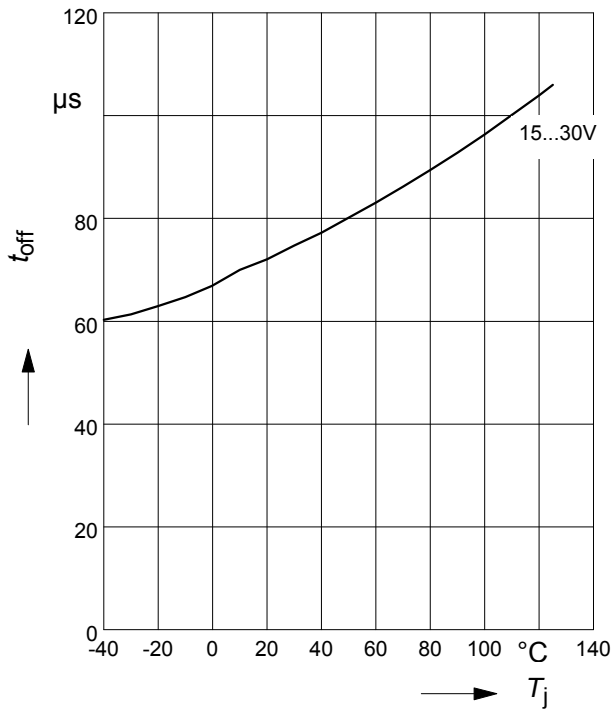

Typ. slew rate on

dV/dt_{on} = f(T_j) ; R_L = 47 Ω

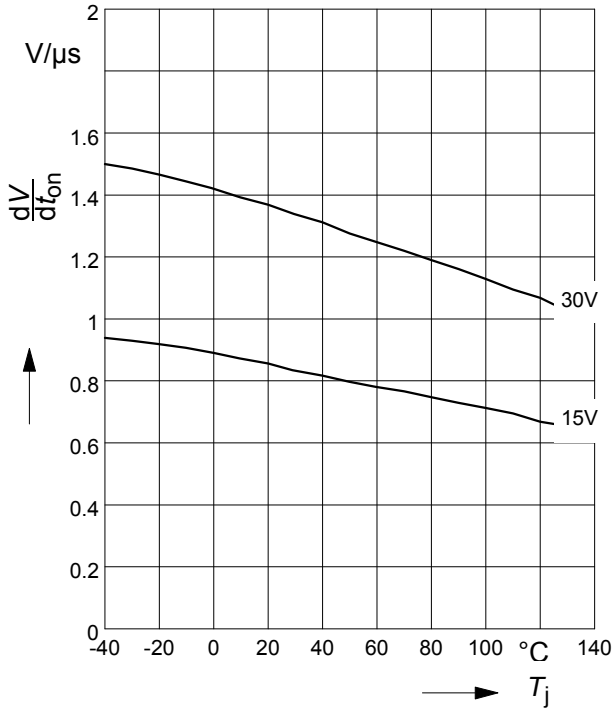

Typ. slew rate off

dV/dt_{off} = f(T_j); R_L = 47 Ω

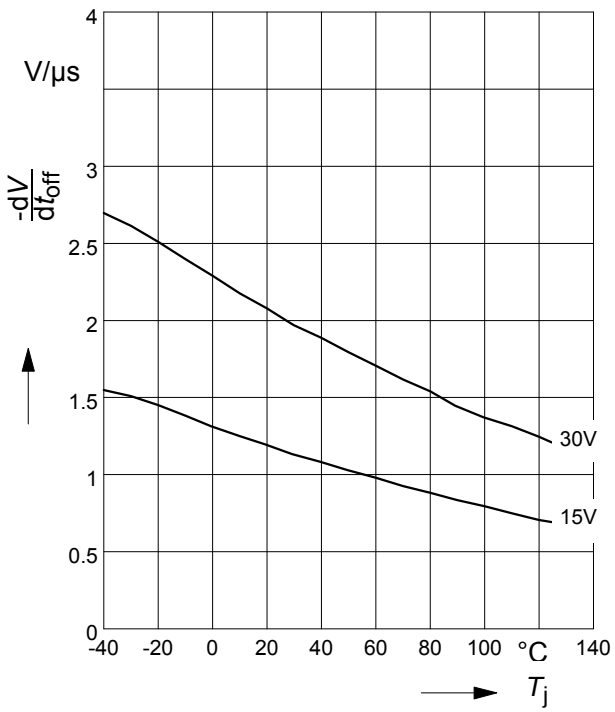

Typ. initial peak short circuit current limit
$I_{L(SCp)}$ **= f(**T_j**)** ; V_{bb} = 20V; t_m = 150µs

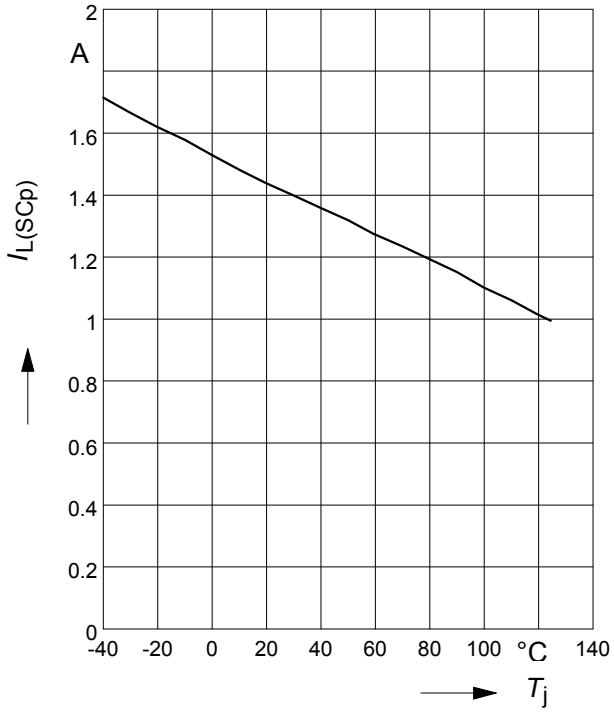

Typ. initial short circuit shutdown time
$t_{off(SC)}$ **= f(**$T_{j,start}$**)** ; V_{bb} = 20V

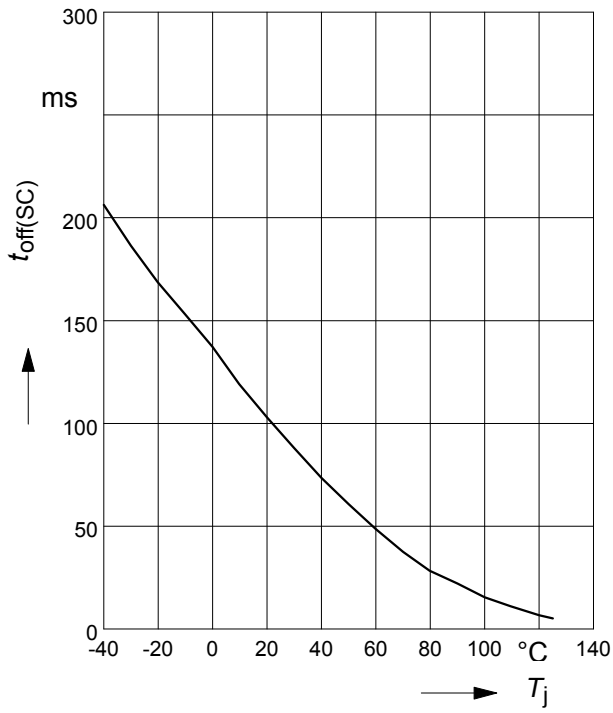

Typ. initial peak short circuit current limit
$I_{L(SCp)}$ **= f(**V_{bb}**);** t_m = 150µs

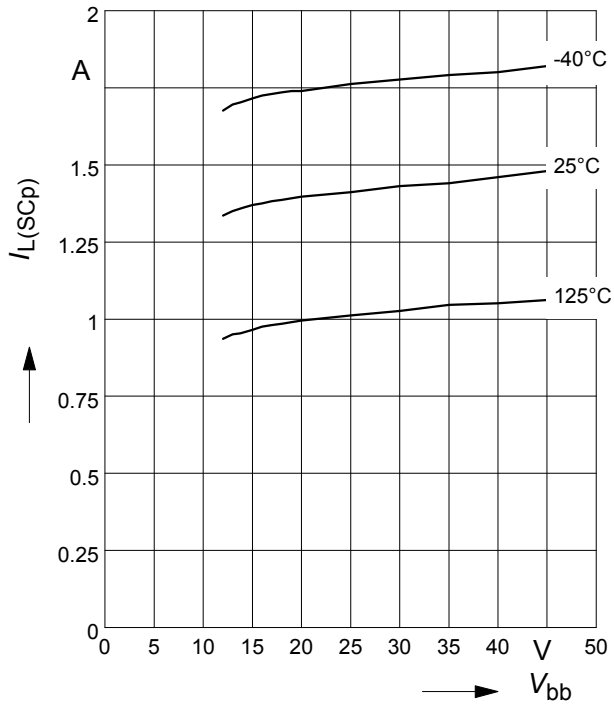

Typ. input current
$I_{IN(on/off)}$ **= f(**T_j**)**; V_{bb} = 15 V; V_{IN} = low/high
$V_{INlow} \leq$ 1,8V; V_{INhigh} = 5V

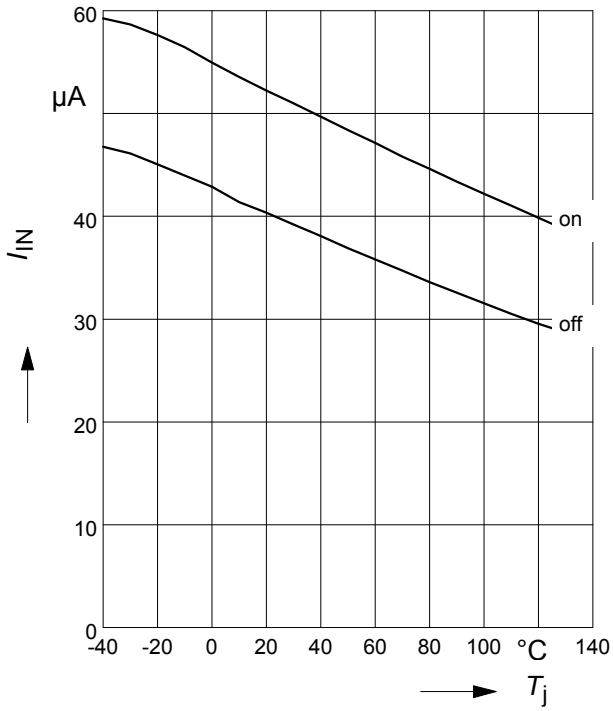

Typ. input current

$I_{IN} = f(V_{IN})$; V_{bb} =15 V

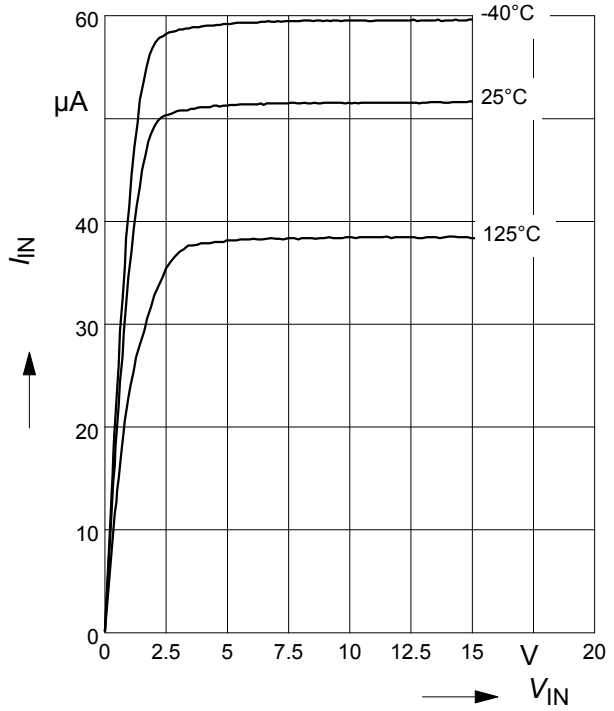

Typ. input threshold voltage

$V_{IN(th)} = f(T_j)$; V_{bb} = 15 V

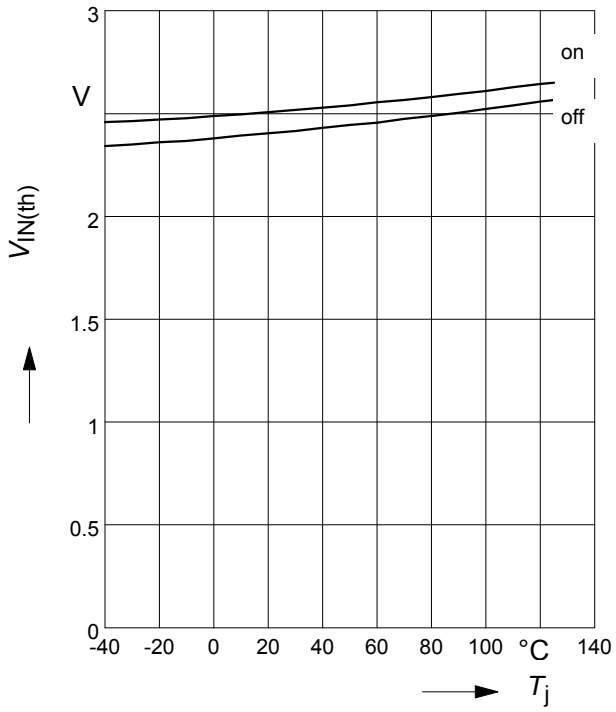

Typ. input threshold voltage

$V_{IN(th)} = f(V_{bb})$; T_j = 25°C

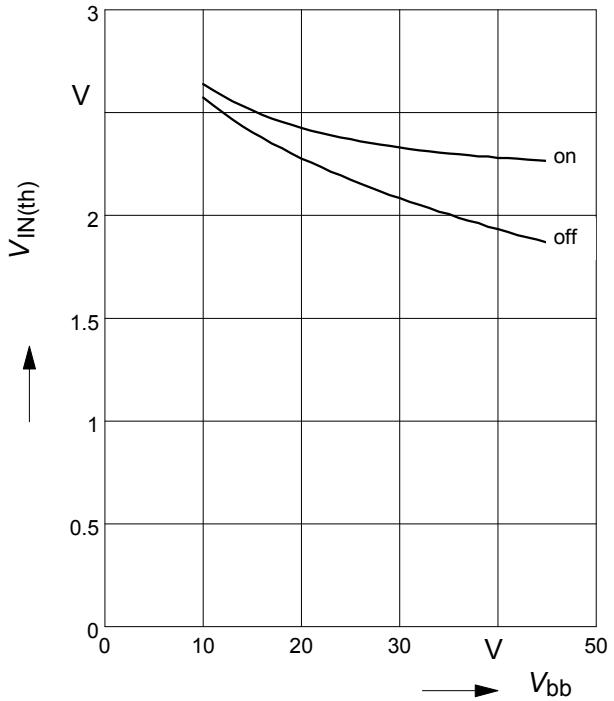

Typ. standby current

$I_{bb(off)} = f(T_j)$; V_{bb} = 32V ; $V_{IN} \leq$ 1,2 V

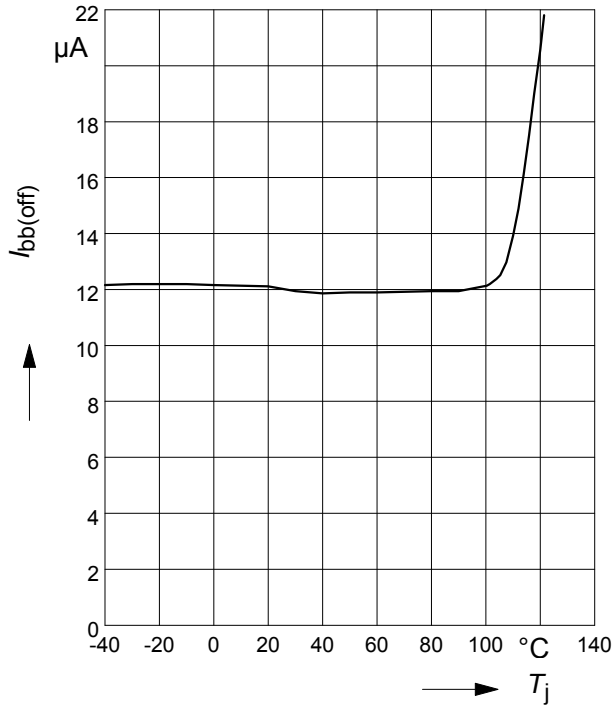

Maximum allowable inductive switch-off energy, single pulse

$E_{AS} = f(I_L)$; T_{jstart} = 125°C

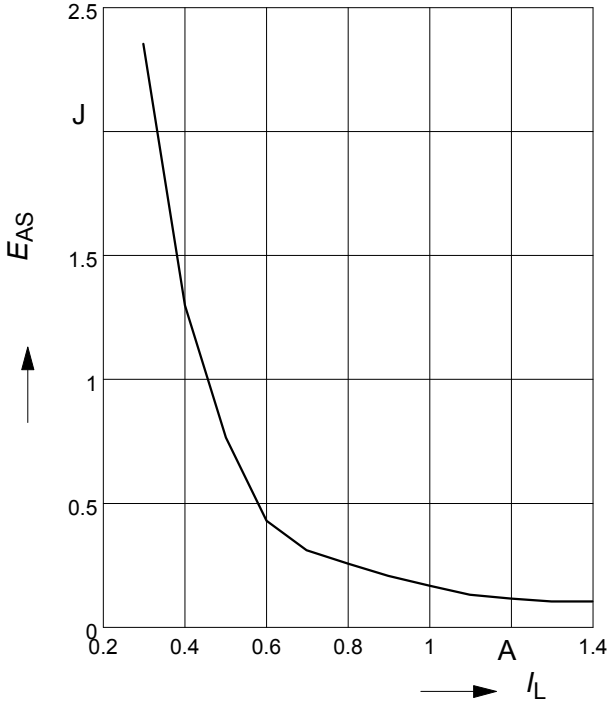

Typ. leakage current

$I_{L(off)} = f(T_j)$; V_{bb} = 32V ; $V_{IN} \leq$ 1,2 V

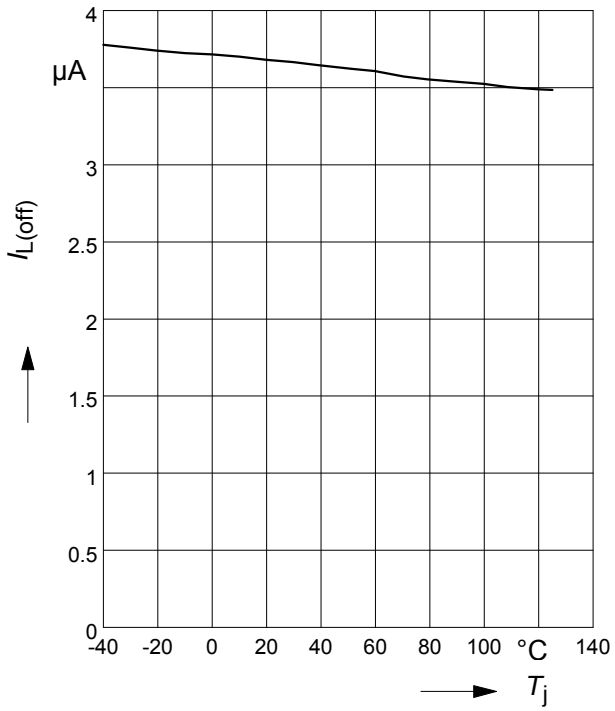

Typ. input delay time at switch on V_{bb}

$t_{d(Vbbon)} = f(V_{bb})$

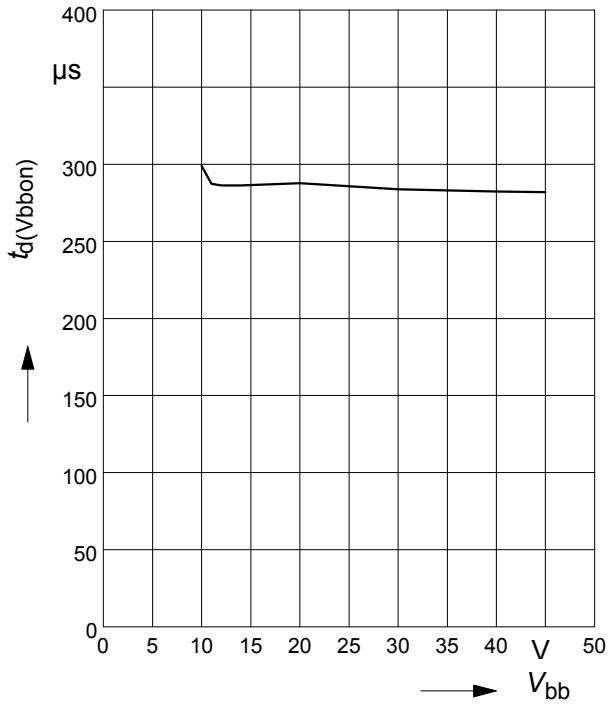

Timing diagrams

Figure 1a: Vbb turn on:

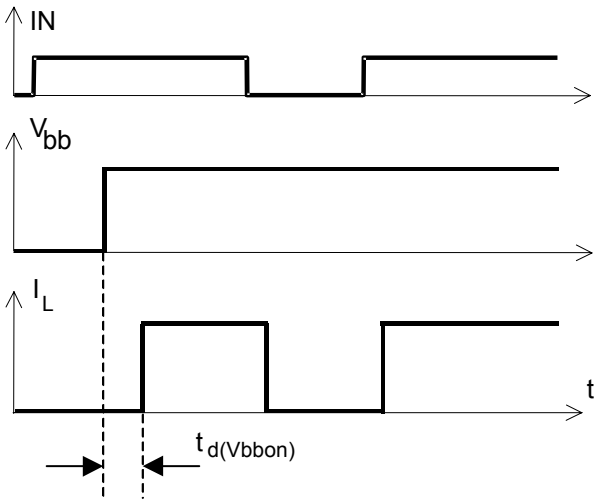

Figure 2b: Switching a lamp

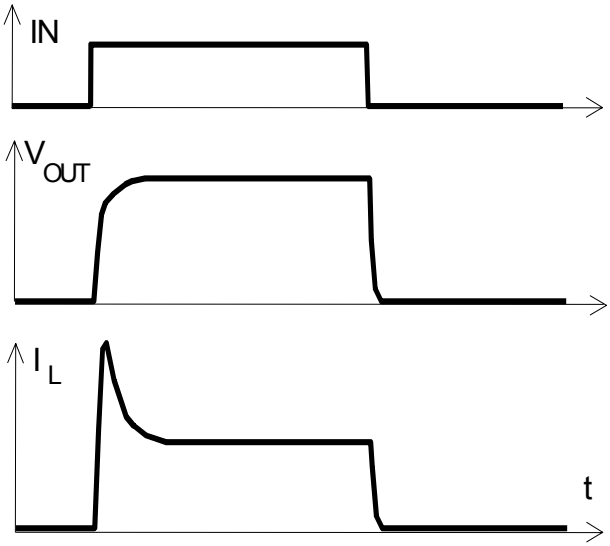

Figure 2a: Switching a resistive load, turn-on/off time and slew rate definition

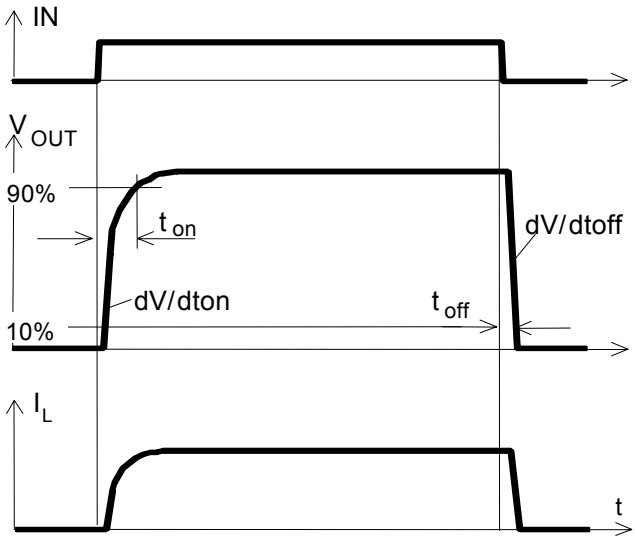

Figure 2c: Switching an inductive load

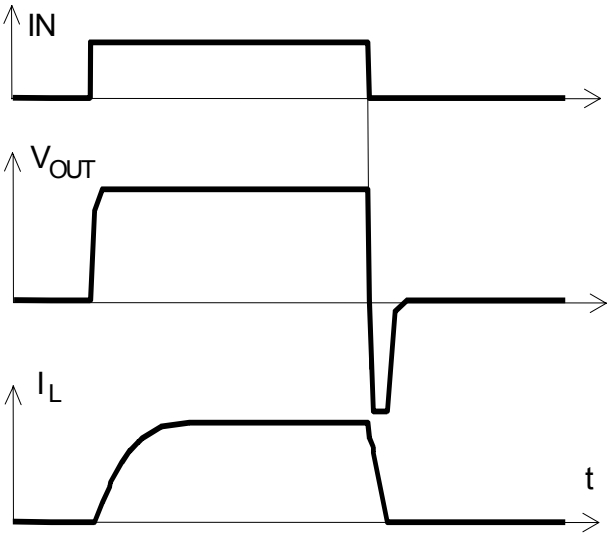

Figure 3a: Turn on into short circuit,
shut down by overtemperature, restart by cooling

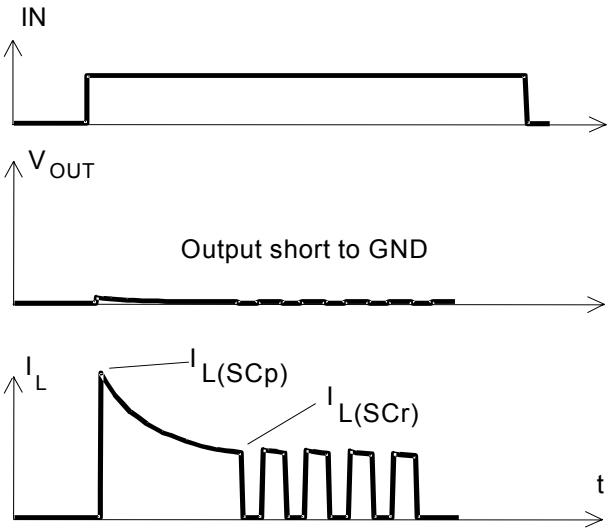

Heating up of the chip may require several milliseconds, depending on external conditions.

Figure 3b: Short circuit in on-state
shut down by overtemperature, restart by cooling

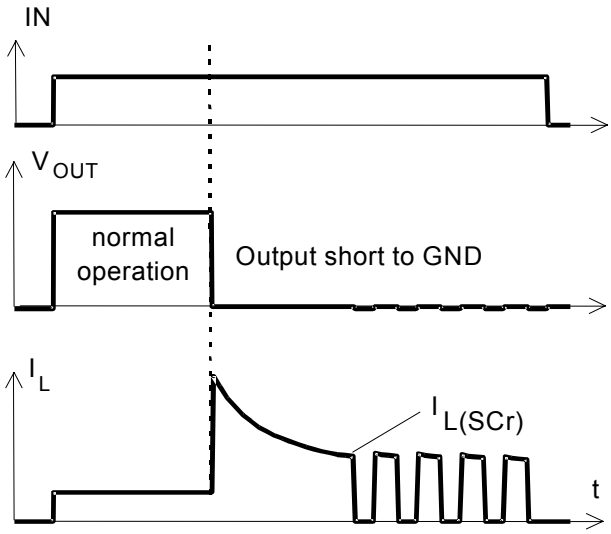

Figure 4: Overtemperature:
Reset if $T_j < T_{jt}$

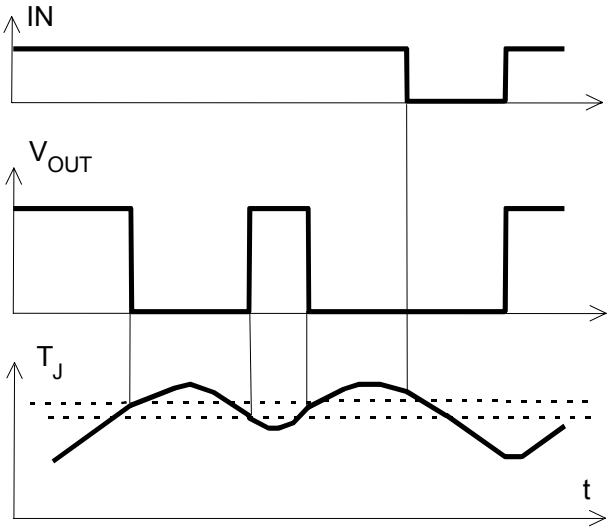

Figure 5: Undervoltage shutdown and restart

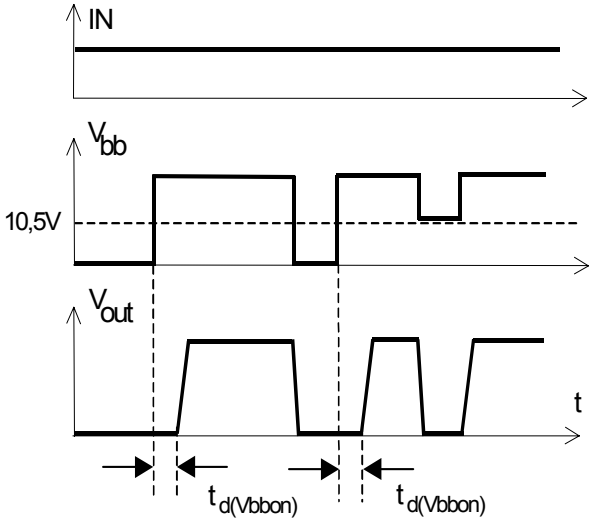

Package and ordering code

all dimensions in mm

Sales code	ITS 4141N
Ordering code, standard (1000 pcs.)	SP000219536

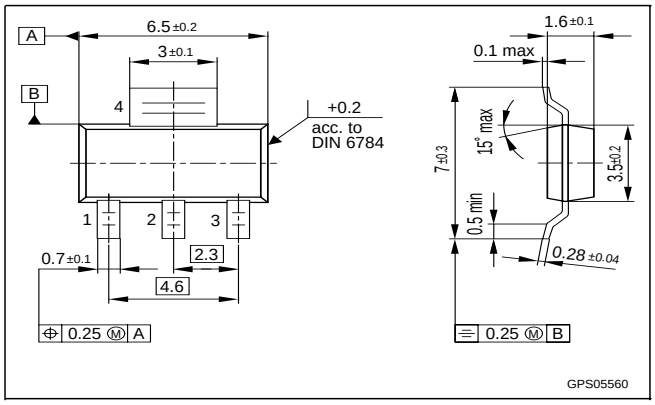

Published by
Infineon Technologies AG,
St.-Martin-Strasse 53,
D-81669 München
© Infineon Technologies AG 2001
All Rights Reserved.

Attention please!
The information herein is given to describe certain components and shall not be considered as a guarantee of characteristics.

Terms of delivery and rights to technical change reserved.

We hereby disclaim any and all warranties, including but not limited to warranties of non-infringement, regarding circuits, descriptions and charts stated herein.

Infineon Technologies is an approved CECC manufacturer.

Information
For further information on technology, delivery terms and conditions and prices please contact your nearest Infineon Technologies Office in Germany or our Infineon Technologies Representatives worldwide (see address list).

Warnings
Due to technical requirements components may contain dangerous substances. For information on the types in question please contact your nearest Infineon Technologies Office.

Infineon Technologies Components may only be used in life-support devices or systems with the express written approval of Infineon Technologies, if a failure of such components can reasonably be expected to cause the failure of that life-support device or system, or to affect the safety or effectiveness of that device or system. Life support devices or systems are intended to be implanted in the human body, or to support and/or maintain and sustain and/or protect human life. If they fail, it is reasonable to assume that the health of the user or other persons may be endangered.