50 Amp. Glass Pasivated Bridge Rectifiers

Dimensions in mm.

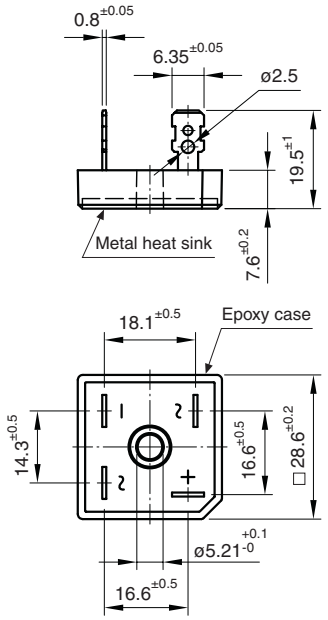

Voltage	Current
50 to 600 V	50 A

HYPERECTIFIER®

- Glass Passivated Junction
- UL recognized under component index file number E320541.
- Terminals: FASTON
- Max. Mounting Torque: 25 Kg x cm

Lead and polarity identifications

High surge current capability

Maximum Ratings, according to IEC publication No. 134

		FB5000	FB5001	FB5002	FB5004	FB5006
V_{RRM}	Peak Recurrent Reverse Voltage (V)	50	100	200	400	600
V_{RMS}	Maximum RMS Voltage (V)	35	70	140	280	420
V_R	Recommended Input Voltage (V)	20	40	80	125	250
$I_{F(AV)}$	Max. forward current R-load: At T case = 55 °C	50 A				
	At T case = 90 °C	35 A				
	With Al Square Chassis (200 cm^2 x 3 mm.) Tamb = 45 °C	16 A				
I_{FRM}	Recurrent peak forward current	150 A				
I_{FSM}	10 ms. peak forward current	500 A				
I^2t	I^2t value for fusing (t = 10 ms)	1250 A^2sec				
T_j	Operating temperature range	– 55 to + 150 °C				
T_{stg}	Storage temperature range	– 55 to + 150 °C				

Electrical Characteristics at Tamb = 25 °C

V_F	Max. forward voltage drop per element at I_F = 25 A	1.1 V
I_R	Max. reverse current per element at V_{RRM} d.c.	5 µA
R_{thj-c}	Typical thermal resistance junction to case	1.2 °C/W
	Isolation voltage from case to leads	2500 Vac

Charactarestic Curves

TYPICAL FORWARD CHARACTERISTIC

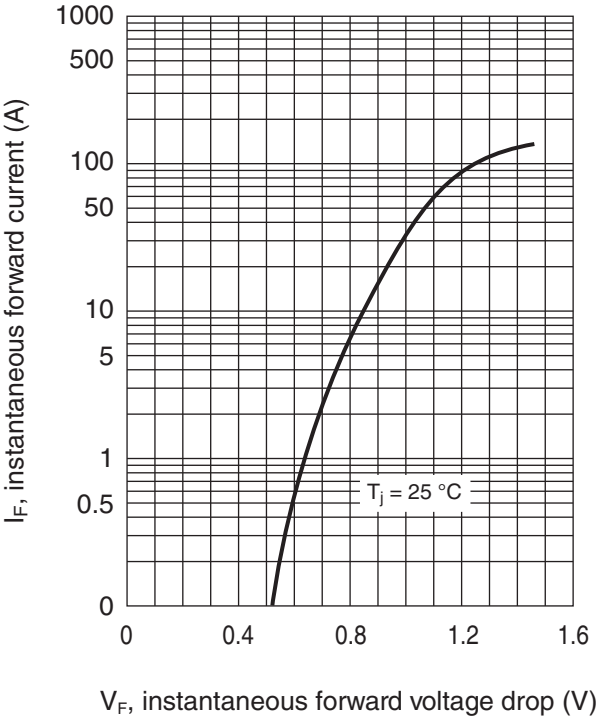

MAXIMUM NON-REPETITIVE
PEAK FORWARD SURGE CURRENT

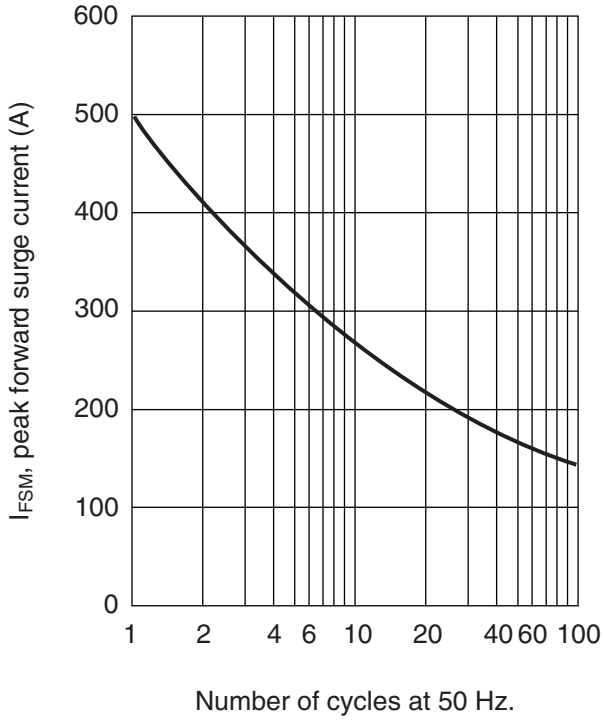

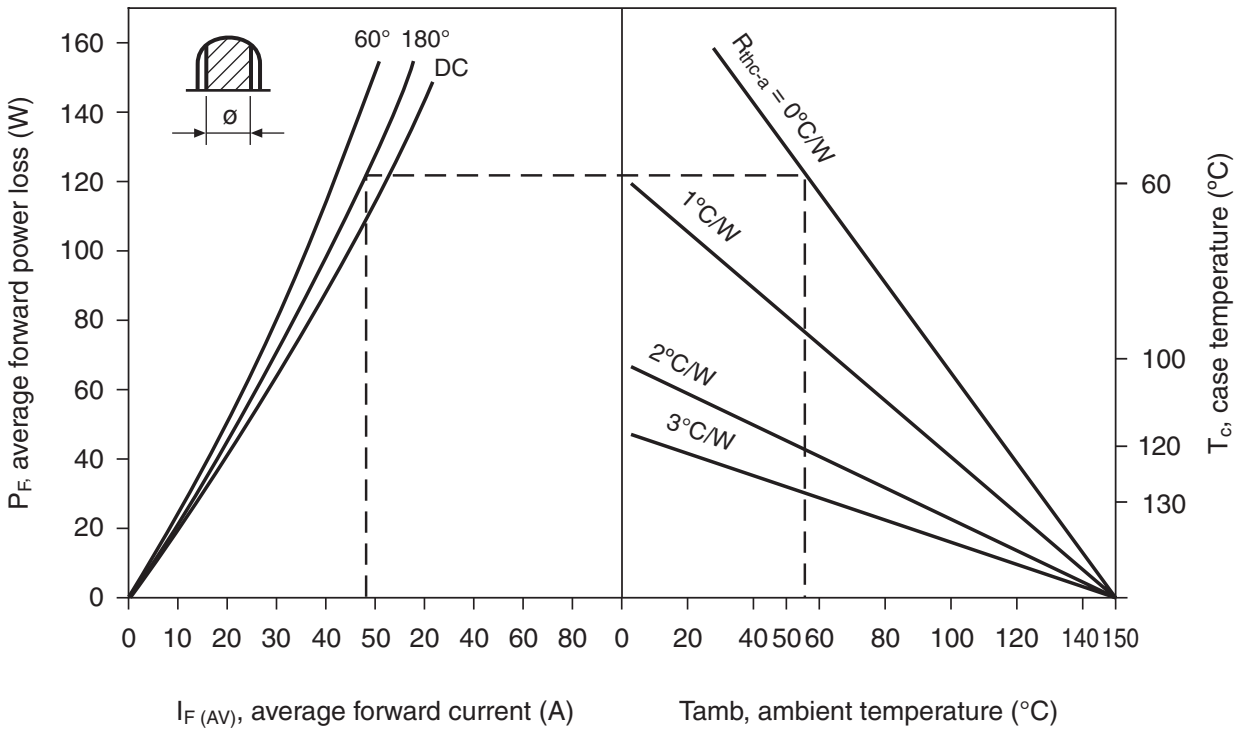

Interrelation between power dissipation and the max.
allowable ambient temperature.