KUBARA LAMINA

D22-25
Diode

KKD2225, February 2014 version

Diode type D22 are design for use in power rectifying circuits under normal operating conditions.

KEY PARAMETERS

U_{RRM}	**up to 1400 V**
$I_{F(AV)}$	**25 A**
I_{FSM}	**275 A**

FEATURES

- all diffused design
- high current capabilities
- high surge current capabilities
- compact size and small weight
- tested according to IEC standards

APPLICATION

- Medium Voltage Power Supplies
- Motor Control
- Battery Chargers
- Free Wheeling Diode
- Resistance Welding

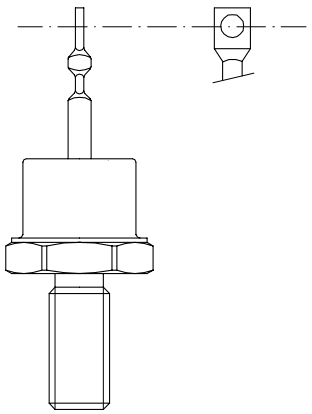

Outline type code: DO-4

See package details for further information

KUBARA LAMINA SA
Puławska 34
PL-05-500 Piaseczno
POLAND

Tel.: +48-22-398 94 09
Tel.: +48-22-757 76 60
Fax: +48-22-750 08 84
e-mail: sekretariat@kubara-lamina.com
www.kubara-lamina.com

ORDERING INFORMATION

When ordering please refer to device code builder presented below.
Please use the complete part number when ordering, quote or in any future correspondence relating to your order.

D22-25- □□-□0

polarity code: N –cathode on base, R –anode on base

voltage class (hundreds of volts)

ELECTRICAL PARAMETERS

Voltage ratings

Voltage class	U_{RRM}	I_{RRM}
	V	mA
01	100	8
02	200	
04	400	
06	600	
08	800	
10	1000	
12	1200	
14	1400	

KUBARA LAMINA SA
Puławska 34
PL-05-500 Piaseczno
POLAND

Tel.: +48-22-398 94 09
Tel.: +48-22-757 76 60
Fax: +48-22-750 08 84
e-mail: sekretariat@kubara-lamina.com
www.kubara-lamina.com

Electrical properties

Parameter		Unit	Test conditions	Value
Average forward current @ case temperature	$I_{F(AV))}$	A		25
	T_c	°C		120
RMS forward current	$I_{F(RMS)}$	A		39,25
Surge current	I_{FSM}	A	t_p=10ms	275
I^2t – value	I^2t	kA^2s	$T_J=T_{JMAX}$	0,378
Forward voltage drop max.	U_{FM}	V	T_j=25°C, I_{FM}=50A	1,50
Treshold voltage	$U_{F(T0)}$	V	$T_j=T_{jmax}$	1,15
Slope resistance	r_F	mΩ		7

Termal properties

Parameter		Unit	Test conditions	Value
Thermal resistance, junction to case	R_{thJC}	°C/W	two sided, DC	1,50
Operating junction temperature	T_{jmin}...T_{jmax}	°C		-25...+190
Storage temperature	T_{stg}	°C		-25…+190

Mechanical properties

Parameter		Unit	Value
Mounting torque	F_M	Nm	1,2 – 1,5
Weight	m	g	7

KUBARA LAMINA SA
Puławska 34
PL-05-500 Piaseczno
POLAND

Tel.: +48-22-398 94 09
Tel.: +48-22-757 76 60
Fax: +48-22-750 08 84
e-mail: sekretariat@kubara-lamina.com
www.kubara-lamina.com

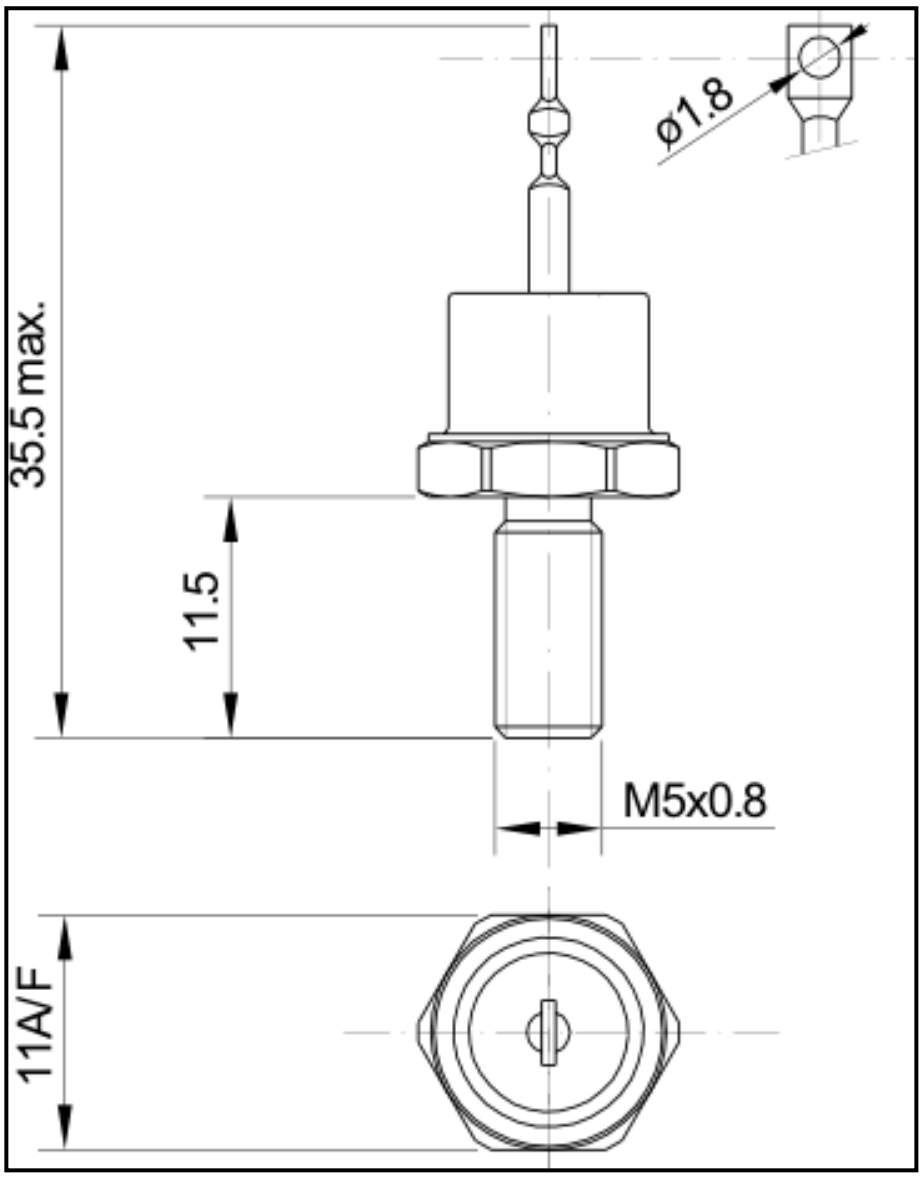

For further package information, please contact Sales & Marketing Department. All dimensions in mm, unless stated otherwise.
Do not scale.

KUBARA LAMINA SA
Puławska 34
PL-05-500 Piaseczno
POLAND

Tel.: +48-22-398 94 09
Tel.: +48-22-757 76 60
Fax: +48-22-750 08 84
e-mail: sekretariat@kubara-lamina.com
www.kubara-lamina.com

CHARACTERISTICS

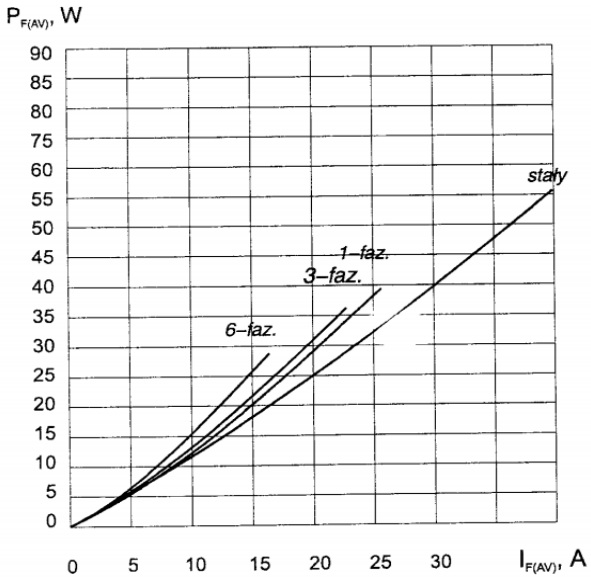

Forward characteristic

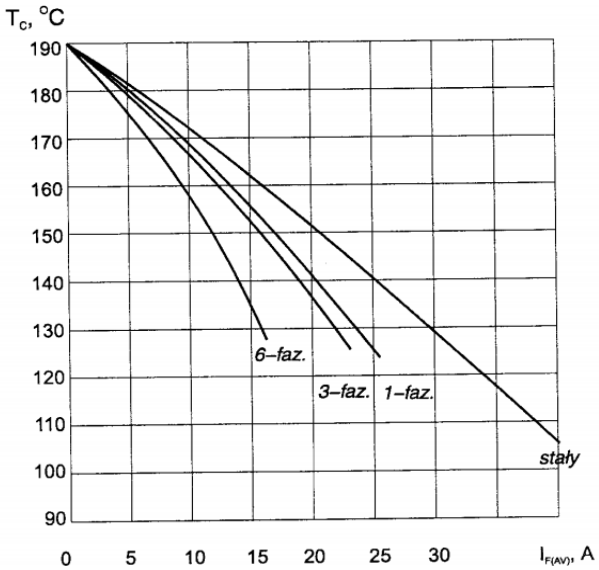

Maximum case temperature vs. forward current. Sinusoidal waveform.

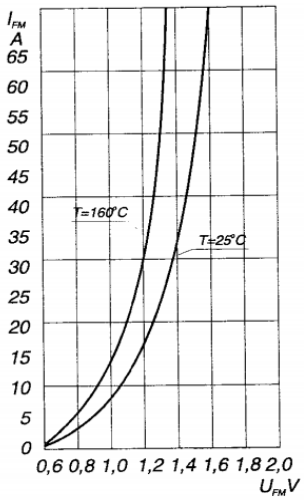

Forward characteristic

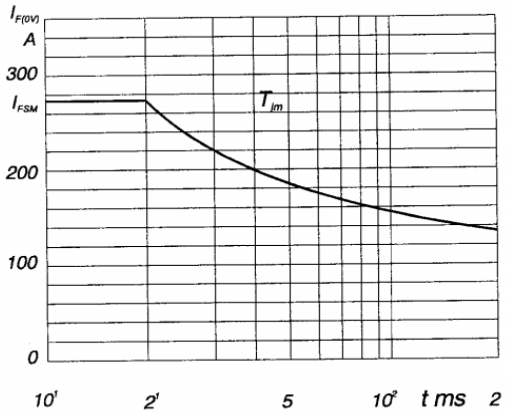

Maximum overload characteristic.

KUBARA LAMINA SA
Puławska 34
PL-05-500 Piaseczno
POLAND

Tel.: +48-22-398 94 09
Tel.: +48-22-757 76 60
Fax: +48-22-750 08 84
e-mail: sekretariat@kubara-lamina.com
www.kubara-lamina.com