Zakłady Elektronowe
LAMINA S.A.

# T83-800
## Phase Control Thyristor

KKT83800, July 2005 version

Thyristors type T83 are of modern design with pressure contacts, high alumina ceramic insulator and cold-welding encapsulation. Designed for use in power electronic circuits and equipment under normal operating conditions.

## KEY PARAMETERS

| | |
|---|---|
| **$U_{DRM}$, $U_{RRM}$** | **up to 2400 V** |
| **$I_{T(AV)}$** | **800 A** |
| **$I_{TSM}$** | **13000 A** |
| **du/dt*** | **1000 V/µs** |
| **di/dt** | **200 A/µs** |

* maximum (non standard) value

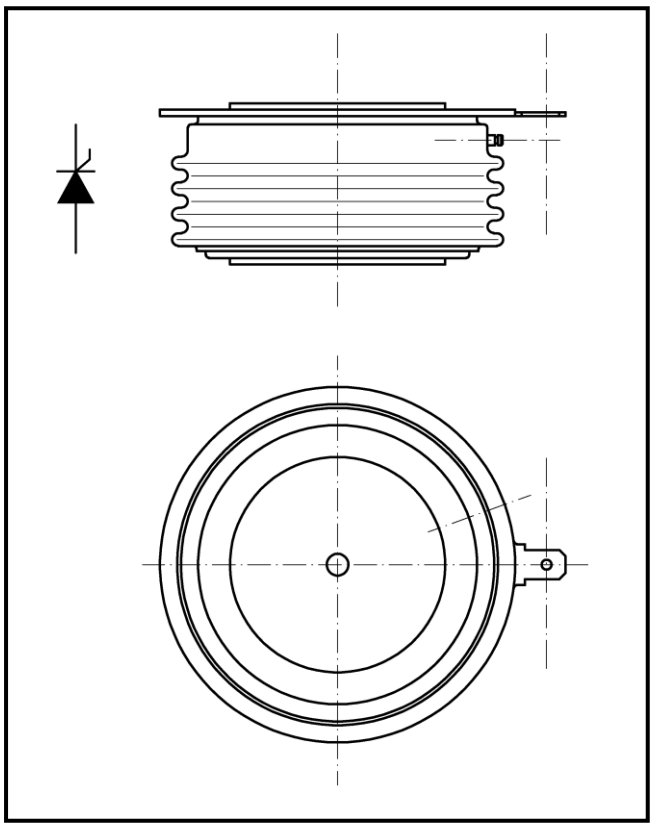

**Outline type code: JEDEC TO-200AC**
See package details for further information

## FEATURES

- all diffused design
- high current capabilities
- high surge current capabilities
- high rates voltages
- high du/dt
- low gate current
- dynamic gate
- low thermal impedance
- tested according to IEC standards
- compact size and small weight

## APPLICATION

- High Power Drives
- DC Motor Control
- High Voltage Power Supplies

Designed for use in high power industrial and commercial electronic circuits and equipment where high currents are encoutered and high reliability is essential.

**Zakłady Elektronowe LAMINA *S.A.***
Puławska 34
PL-05-500 Piaseczno
POLAND

Tel.: +48-22-7572731
Tel.: +48-22-3989409
Fax.: +48-22-3989407
e-mail: sekretariat@lamina.com.pl
www.lamina.com.pl

## ORDERING INFORMATION

When ordering please refer to device code builder presented below.
Please use the complete part number when ordering, quote or in any future correspondence relating to your order.

**T83-800-□□**

voltage class (hundreds of volts)

This is standard device, with no dynamic parameters specified and standard accessory set.
Please refer to **Electrical Parameters** if specific dynamic demands have to be met.
Those information, as well as any other concerning non-standard accessories e.g. custom leads lenght or lead terminal connector type should be included in the order.

## ELECTRICAL PARAMETERS

**Voltage ratings**

| Voltage class | $U_{DRM}$, $U_{RRM}$ | $U_{DSM}$, $U_{RSM}$ | $I_{DRM}$, $I_{RRM}$ |
|---|---|---|---|
| | V | V | mA |
| 04 | 400 | 500 | 50 |
| 06 | 600 | 700 | |
| 08 | 800 | 900 | |
| 10 | 1000 | 1100 | |
| 12 | 1200 | 1300 | |
| 14 | 1400 | 1500 | |
| 16 | 1600 | 1700 | |
| 18 | 1800 | 1900 | |
| 20 | 2000 | 2100 | |
| 22 | 2200 | 2300 | |
| 24 | 2400 | 2500 | |


**Zakłady Elektronowe LAMINA *S.A.***
Puławska 34
PL-05-500 Piaseczno
POLAND

Tel.: +48-22-7572731
Tel.: +48-22-3989409
Fax.: +48-22-3989407
e-mail: sekretariat@lamina.com.pl
www.lamina.com.pl

# T83-800
## Phase Control Thyristor

KKT83800, July 2005 version

### dU/dt group codes

| Group code | du/dt |
|---|---|
| | V/µs |
| 0 | no specified value |
| 5 | 320 |
| 6 | 500 |
| 7 | 1000 |

### Electrical properties

| Parameter | | Unit | Test conditions | Value |
|---|---|---|---|---|
| Average on-state current | $I_{T(AV)}$ | A | | 800 |
| Case temperature | $T_c$ | °C | | 70 |
| RMS on-state current | $I_{T(RMS)}$ | A | | 1250 |
| Surge on-state current | $I_{TSM}$ | A | $T_j$=125°C, $U_R$=$U_{RRM}$, $t_p$=10ms | 13000 |
| $I^2t$ – value | $I^2t$ | $kA^2s$ | | 845 |
| On-state voltage max. | $U_{TM}$ | V | $T_j$=25°C, $I_{TM}$=1500A | 1.70 |
| Treshold voltage | $U_{T(T0)}$ | V | | 0,99 |
| Slope resistance | $r_T$ | mΩ | | 0,49 |
| Latching current | $I_l$ | mA | $T_j$=25°C, $U_D$=12V | 800 |
| Holding current | $I_H$ | mA | $T_j$=25°C, $U_D$=12V | 200 |
| Circuit commutated turn-off time (typical) | $t_q$ (typ) | µs | $T_j$=125°C, $I_{TM}$=250A, $di_R/dt$=25A/µs, du/dt=20V/µs, $U_D$=0,67$U_{DRM}$, $U_{RM}$=100V | 200 |
| Turn-0n time (typical) | $t_{on}$ | µs | $I_{TM}$=100A, $U_{DM}$=100V | 12 |
| Rate of rise of on-state current-repetitive | di/dt | A/µs | $T_j$=125°C, $I_{TM}$=3$I_{T(AV)}$, $U_D$=0,67$U_{DRM}$, f=50Hz, $I_{GM}$=1A, $di_G/dt$=1A/µs | 200 |
| Critical rate of raise of off-state voltage | du/dt | V/µs | $T_j$=125°C, $U_D$=0,67$U_{DRM}$, | 320 – 1000 (see du/dt group codes) |
| Gate current to trigger | $I_{GT}$ | mA | $T_j$=25°C, $U_D$=12V | 200 |
| Gate voltage to trigger | $U_{GT}$ | V | $T_j$=25°C, $U_D$=12V | 3 |

### Termal properties

| Parameter | | Unit | Test conditions | Value |
|---|---|---|---|---|
| Thermal resistance, junction to case | $R_{thJC}$ | °C/W | two sided, DC | 0,032 |
| Thermal resistance, case to heatsink | $R_{thCS}$ | °C/W | two sided | 0,020 |
| Operating junction temperature | $T_{jmin}$...$T_{jmax}$ | °C | | -40...+125 |
| Storage temperature | $T_{stg}$ | °C | | -40...+125 |

**Zakłady Elektronowe LAMINA *S.A.***
Puławska 34
PL-05-500 Piaseczno
POLAND

Tel.: +48-22-7572731
Tel.: +48-22-3989409
Fax.: +48-22-3989407
e-mail: sekretariat@lamina.com.pl
www.lamina.com.pl

# T83-800
## Phase Control Thyristor

KKT83800, July 2005 version

**Mechanical properties**

| Parameter | | Unit | Value |
|---|---|---|---|
| Clamping force | $F_M$ | kN | 12,0 ... 14,0 |
| Weight | m | g | 260 |

**Package details**

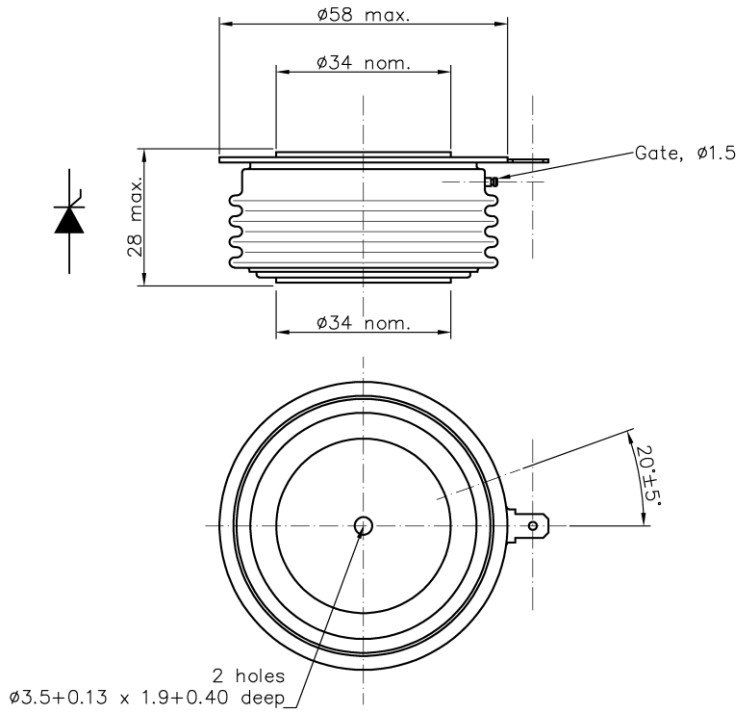


Clamping force: 12 – 14 kN
Lead lenght: std. 205 mm (or custom lenght)
Lead terminal connector: M4 ring

Nominal weight: 259 g (with std. lead)

For further package information, please contact Sales & Marketing Department. All dimensions in mm, unless stated otherwise.
Do not scale.

**Zakłady Elektronowe LAMINA *S.A.***
Puławska 34
PL-05-500 Piaseczno
POLAND

Tel.: +48-22-7572731
Tel.: +48-22-3989409
Fax.: +48-22-3989407
e-mail: sekretariat@lamina.com.pl
www.lamina.com.pl

# T83-800
## Phase Control Thyristor

KKT83800, July 2005 version

## CHARACTERISTICS

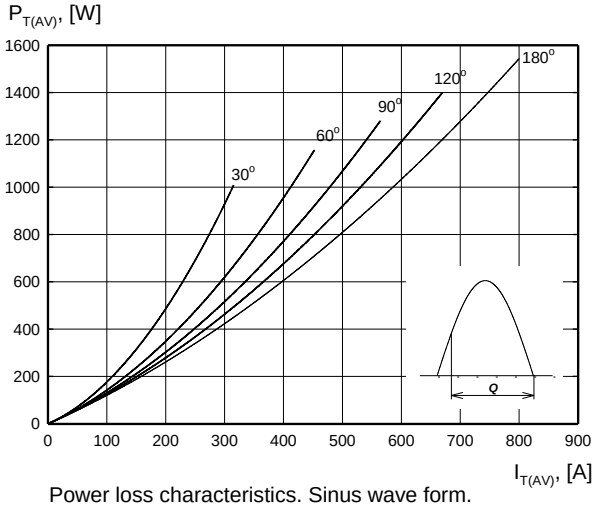


Power loss characteristics. Sinus wave form.

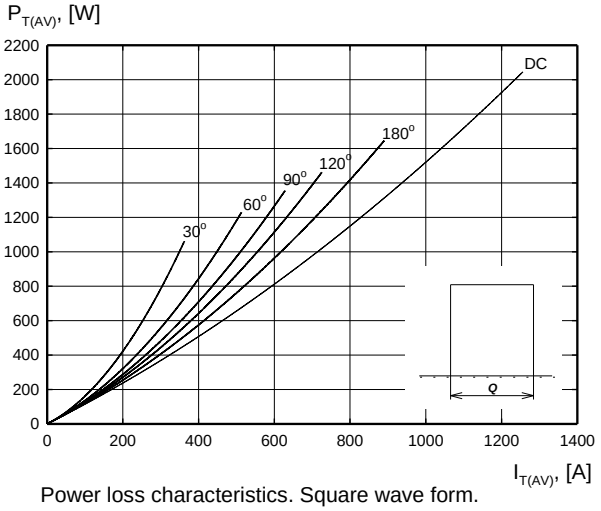


Power loss characteristics. Square wave form.

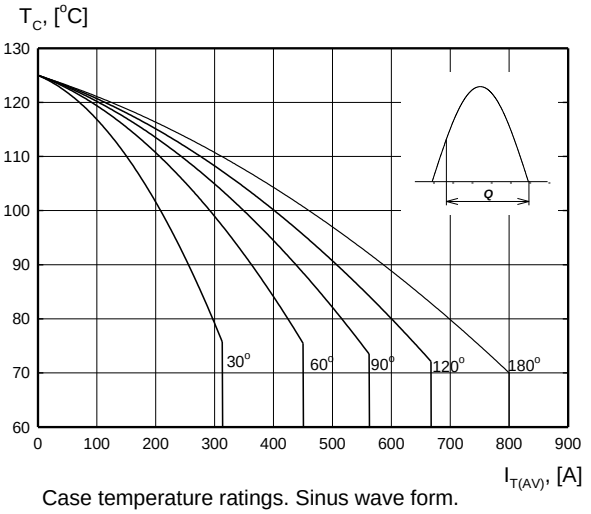


Case temperature ratings. Sinus wave form.

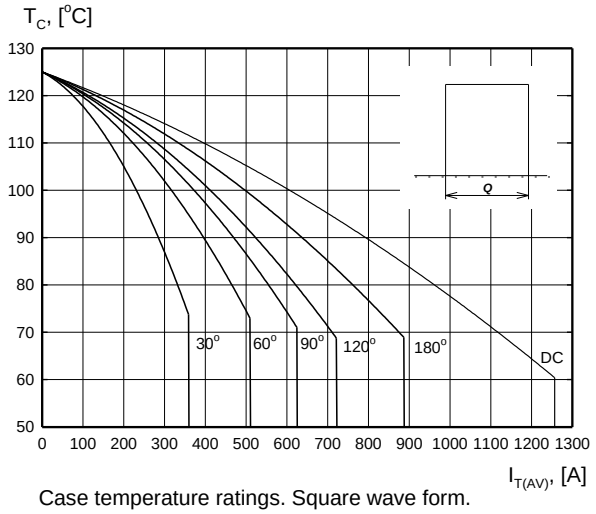


Case temperature ratings. Square wave form.


**Zakłady Elektronowe LAMINA *S.A.***
Puławska 34
PL-05-500 Piaseczno
POLAND

Tel.: +48-22-7572731
Tel.: +48-22-3989409
Fax.: +48-22-3989407
e-mail: sekretariat@lamina.com.pl
www.lamina.com.pl

# T83-800
## Phase Control Thyristor

KKT83800, July 2005 version

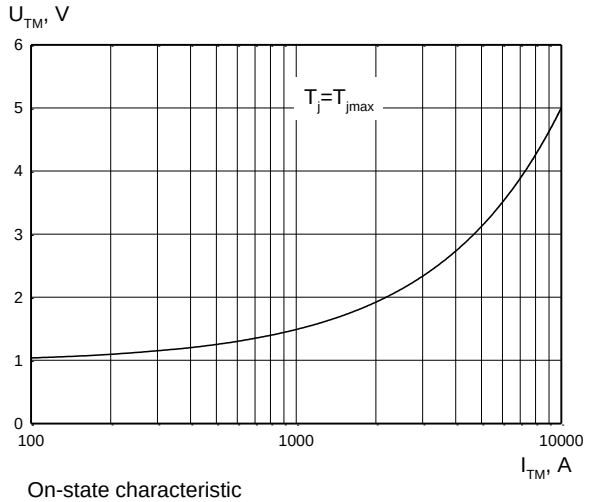


On-state characteristic

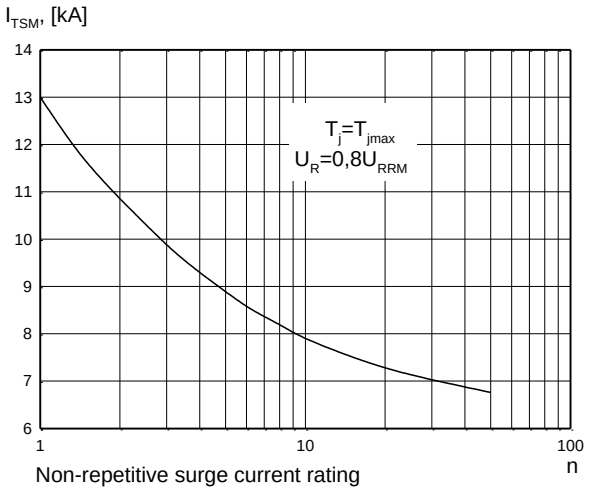


Non-repetitive surge current rating

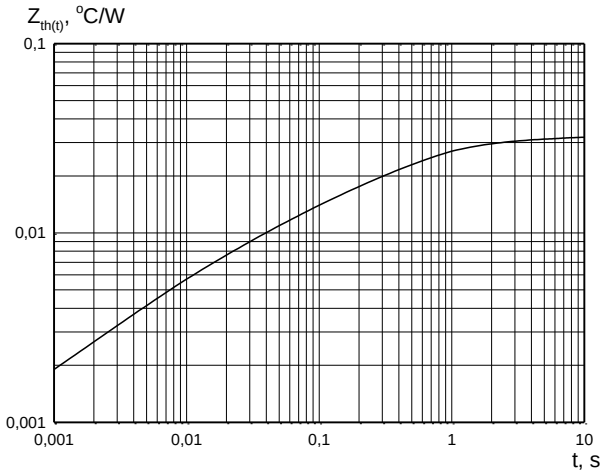


Transient thermal impedance

.


**Zakłady Elektronowe LAMINA *S.A.***
Puławska 34
PL-05-500 Piaseczno
POLAND

Tel.: +48-22-7572731
Tel.: +48-22-3989409
Fax.: +48-22-3989407
e-mail: sekretariat@lamina.com.pl
www.lamina.com.pl

### Gate characteristics

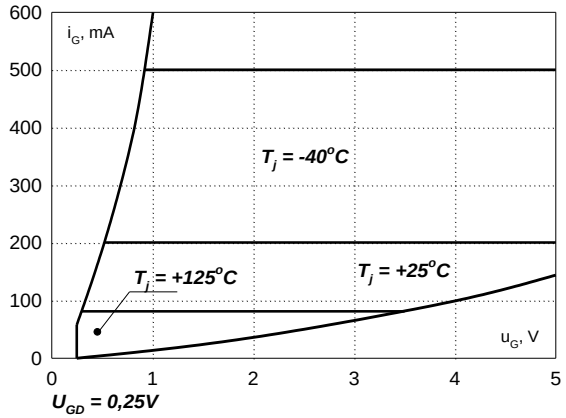


Gate characteristic. Possible trigger area.

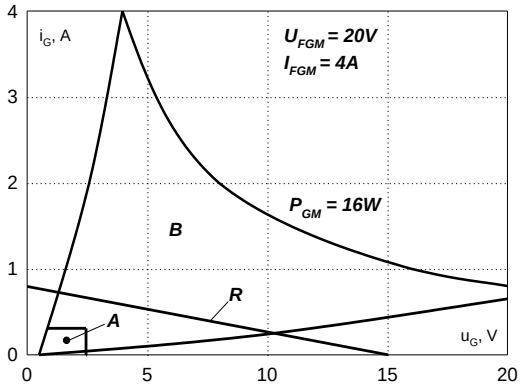


Gate characteristic.
A - possible trigger area
B - permitted gate pulse forcing area
R - recommended gate drive load line

## HEATSINKS

LAMINA S.I. has its own proprietary range of extruded aluminium heatsinks designed to optimise the performance of our semiconductors with natural and forced air flow. High efficiency water cooled copper heatsinks are also available.

## DEVICE CLAMPS

Disc devices require the correct clamping force to ensure their best operation. LAMINA S.I. offers a wide selection of clamps to suit all of our manufactured devices.

## POWER ASSEMBLY CAPABILITY

LAMINA S.I. provides a support for those customers requiring more than a basic semiconductor and offers precisely assembled Power Blocks according to factory or customer standards.


**Zakłady Elektronowe LAMINA *S.A.***
Puławska 34
PL-05-500 Piaseczno
POLAND

Tel.: +48-22-7572731
Tel.: +48-22-3989409
Fax.: +48-22-3989407
e-mail: sekretariat@lamina.com.pl
www.lamina.com.pl