STS4DPF30L

DUAL P-CHANNEL 30V - 0.07 Ω - 4A SO-8
STripFET™ POWER MOSFET

PRELIMINARY DATA

TYPE	V_{DSS}	$R_{DS(on)}$	I_D
STS4DPF30L	30 V	<0.08 Ω	4 A

- TYPICAL R_{DS}(on) = 0.07 Ω
- STANDARD OUTLINE FOR EASY AUTOMATED SURFACE MOUNT ASSEMBLY
- LOW THRESHOLD DRIVE

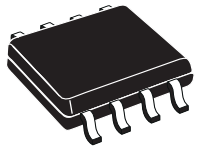

SO-8

DESCRIPTION

This Power MOSFET is the latest development of STMicroelectronis unique "Single Feature Size™" strip-based process. The resulting transistor shows extremely high packing density for low on-resistance, rugged avalanche characteristics and less critical alignment steps therefore a remarkable manufacturing reproducibility.

APPLICATIONS

- BATTERY MANAGEMENT IN NOMADIC EQUIPMENT
- POWER MANAGEMENT IN CELLULAR PHONES
- DC-DC CONVERTER

INTERNAL SCHEMATIC DIAGRAM

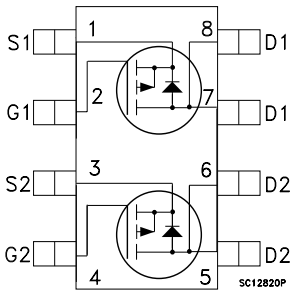

ABSOLUTE MAXIMUM RATINGS

Symbol	Parameter	Value	Unit
V_{DS}	Drain-source Voltage (V_{GS} = 0)	30	V
V_{DGR}	Drain-gate Voltage (R_{GS} = 20 kΩ)	30	V
V_{GS}	Gate- source Voltage	± 16	V
I_D	Drain Current (continuous) at T_C = 25°C Single Operation Drain Current (continuous) at T_C = 100°C Single Operation	4 2.5	A A
I_{DM}(•)	Drain Current (pulsed)	16	A
P_{tot}	Total Dissipation at T_C = 25°C Dual Operation Total Dissipation at T_C = 25°C Single Operation	2.0 1.6	W W

(•) Pulse width limited by safe operating area.

Note: For the P-CHANNEL MOSFET actual polarity of voltages and current has to be reversed

This is preliminary information on a new product now in development or undergoing evaluation. Details are subject to change without notice.

THERMAL DATA

Rthj-amb	(*)Thermal Resistance Junction-ambient	Single Operation Dual Operating	78 62.5	°C/W °C/W
T_j	Thermal Operating Junction-ambient		-55 to150	°C
T_{stg}	Storage Temperature		-55 to 150	°C

(*) When Mounted on 1 inch^2 FR-4 board, 2 oz of Cu and t $\leq$ 10 sec.

ELECTRICAL CHARACTERISTICS (T_{CASE} = 25 °C UNLESS OTHERWISE SPECIFIED)

OFF

Symbol	Parameter	Test Conditions	Min.	Typ.	Max.	Unit
$V_{(BR)DSS}$	Drain-source Breakdown Voltage	I_D = 250 µA, V_{GS} = 0	30			V
I_{DSS}	Zero Gate Voltage Drain Current (V_{GS} = 0)	V_{DS} = Max Rating V_{DS} = Max Rating T_C = 125°C			1 10	µA µA
I_{GSS}	Gate-body Leakage Current (V_{DS} = 0)	V_{GS} = ± 16 V			±100	nA

ON (*)

Symbol	Parameter	Test Conditions	Min.	Typ.	Max.	Unit
$V_{GS(th)}$	Gate Threshold Voltage	V_{DS} = V_{GS} I_D = 250 µA	1			V
$R_{DS(on)}$	Static Drain-source On Resistance	V_{GS} = 10 V I_D = 2 A V_{GS} = 4.5 V I_D = 2 A		0.070 0.085	0.08 0.10	Ω Ω

DYNAMIC

Symbol	Parameter	Test Conditions	Min.	Typ.	Max.	Unit
g_{fs} (*)	Forward Transconductance	V_{DS}= 15V I_D = 2 A		10		S
C_{iss} C_{oss} C_{rss}	Input Capacitance Output Capacitance Reverse Transfer Capacitance	V_{DS} = 25V, f = 1 MHz, V_{GS} = 0		1350 490 130		pF pF pF

ELECTRICAL CHARACTERISTICS (continued)

SWITCHING ON

Symbol	Parameter	Test Conditions	Min.	Typ.	Max.	Unit
$t_{d(on)}$ t_r	Turn-on Delay Time Rise Time	V_{DD} = 15 V I_D = 2 A R_G = 4.7 Ω V_{GS} = 4.5 V (Resistive Load, Figure 1)		25 35		ns ns
Q_g Q_{gs} Q_{gd}	Total Gate Charge Gate-Source Charge Gate-Drain Charge	V_{DD}= 24 V I_D= 4 A V_{GS}= 5 V (See test circuit, Figure 2)		12.5 5 3	16	nC nC nC

SWITCHING OFF

Symbol	Parameter	Test Conditions	Min.	Typ.	Max.	Unit
$t_{d(off)}$ t_f	Turn-off Delay Time Fall Time	V_{DD} = 15 V I_D = 2 A R_G = 4.7Ω, V_{GS} = 4.5 V (Resistive Load, Figure 1)		125 35		ns ns

SOURCE DRAIN DIODE

Symbol	Parameter	Test Conditions	Min.	Typ.	Max.	Unit
I_{SD} I_{SDM} (•)	Source-drain Current Source-drain Current (pulsed)				4 16	A A
V_{SD} (*)	Forward On Voltage	I_{SD} = 4 A V_{GS} = 0			1.2	V
t_{rr} Q_{rr} I_{RRM}	Reverse Recovery Time Reverse Recovery Charge Reverse Recovery Current	I_{SD} = 4 A di/dt = 100A/µs V_{DD} = 15 V T_j = 150°C (See test circuit, Figure 3)		45 36 1.6		ns nC A

(*)Pulsed: Pulse duration = 300 µs, duty cycle 1.5 %.
(•)Pulse width limited by safe operating area.

Fig. 1: Switching Times Test Circuits For Resistive Load

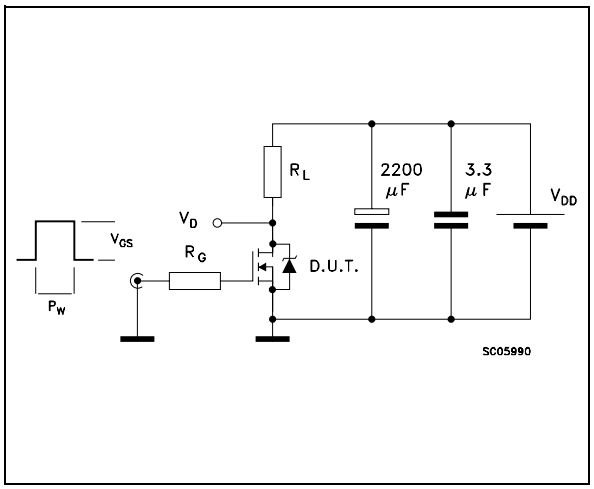

Fig. 2: Gate Charge test Circuit

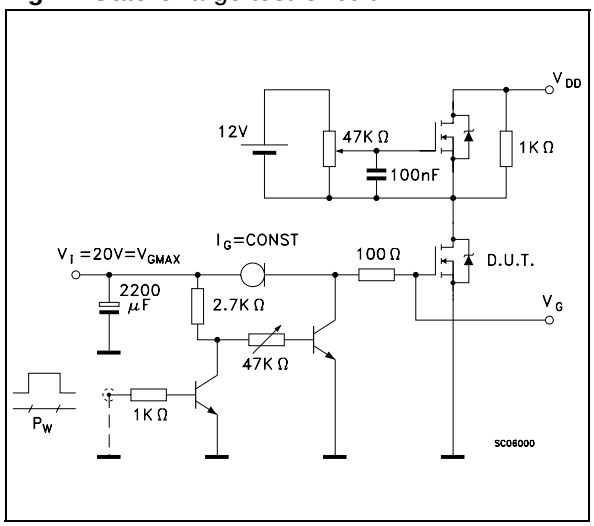

Fig. 3: Test Circuit For Diode Recovery Behaviour

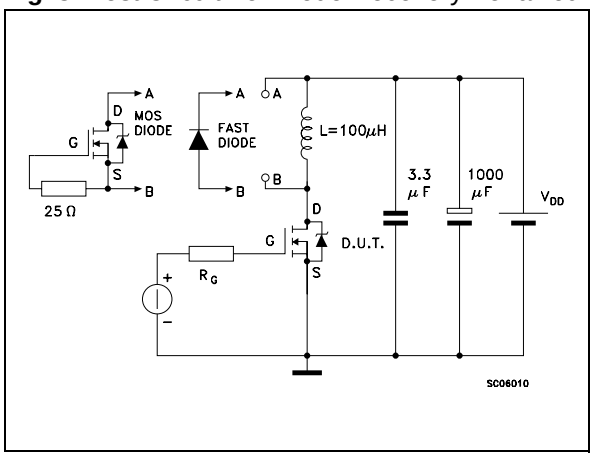

SO-8 MECHANICAL DATA

DIM.	mm			inch		
	MIN.	TYP.	MAX.	MIN.	TYP.	MAX.
A			1.75			0.068
a1	0.1		0.25	0.003		0.009
a2			1.65			0.064
a3	0.65		0.85	0.025		0.033
b	0.35		0.48	0.013		0.018
b1	0.19		0.25	0.007		0.010
C	0.25		0.5	0.010		0.019
c1	45 (typ.)					
D	4.8		5.0	0.188		0.196
E	5.8		6.2	0.228		0.244
e		1.27			0.050	
e3		3.81			0.150	
F	3.8		4.0	0.14		0.157
L	0.4		1.27	0.015		0.050
M			0.6			0.023
S	8 (max.)					

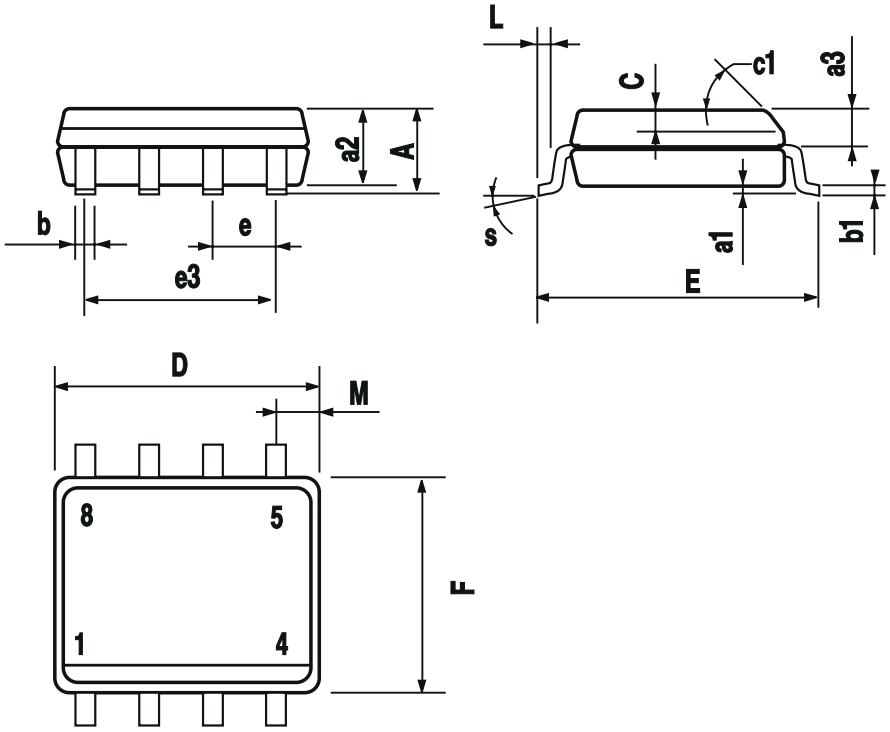

0016023

Information furnished is believed to be accurate and reliable. However, STMicroelectronics assumes no responsibility for the consequences of use of such information nor for any infringement of patents or other rights of third parties which may result from its use. No license is granted by implication or otherwise under any patent or patent rights of STMicroelectronics. Specifications mentioned in this publication are subject to change without notice. This publication supersedes and replaces all information previously supplied. STMicroelectronics products are not authorized for use as critical components in life support devices or systems without express written approval of STMicroelectronics.

The ST logo is registered trademark of STMicroelectronics
® 2002 STMicroelectronics - All Rights Reserved

All other names are the property of their respective owners.

STMicroelectronics GROUP OF COMPANIES
Australia - Brazil - Canada - China - Finland - France - Germany - Hong Kong - India - Israel - Italy - Japan - Malaysia - Malta - Morocco - Singapore - Spain - Sweden - Switzerland - United Kingdom - United States.

http://www.st.com