STGB20NC60V - STGP20NC60V STGW20NC60V

30 A - 600 V - very fast IGBT

Features

- High frequency operation up to 50 kHz
- Lower C_{RES} / C_{IES} ratio (no cross-conduction susceptibility)
- High current capability

Applications

- High frequency inverters
- UPS, motor drivers
- HF, SMPS and PFC in both hard switch and resonant topologies

Description

This IGBT utilizes the advanced PowerMESH™ process resulting in an excellent trade-off between switching performance and low on-state behavior.

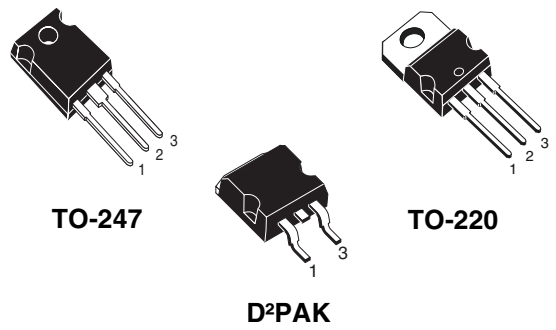

Figure 1. Internal schematic diagram

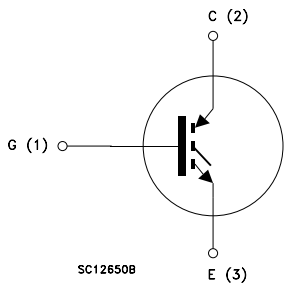

Table 1. Device summary

Order codes	Marking	Package	Packaging
STGB20NC60VT4	GB20NC60V	D²PAK	Tape and reel
STGP20NC60V	GP20NC60V	TO-220	Tube
STGW20NC60V	GW20NC60V	TO-247	Tube

Contents

1 Electrical ratings 3

2 Electrical characteristics 4

2.1 Electrical characteristics (curves) 6

3 Test circuit 9

4 Package mechanical data 10

5 Packaging mechanical data 14

6 Revision history 15

1 Electrical ratings

Table 2. Absolute maximum ratings

Symbol	Parameter	Value	Unit
V_{CES}	Collector-emitter voltage (V_{GE} = 0)	600	V
I_C (1)	Collector current (continuous) at 25 °C	60	A
I_C (1)	Collector current (continuous) at 100 °C	30	A
I_{CL} (2)	Turn-off latching current	100	A
I_{CP} (3)	Pulsed collector current	100	A
V_{GE}	Gate-emitter voltage	± 20	V
P_{TOT}	Total dissipation at T_C = 25 °C	200	W
T_j	Operating junction temperature	– 55 to 150	°C

1. Calculated according to the iterative formula:

$$I_C(T_C) = \frac{T_{JMAX} - T_C}{R_{THJ-C} \times V_{CESAT(MAX)}(T_C, I_C)}$$

2. Vclamp = 80%(V_{CES}), T_j =150 °C, R_G=10 Ω, V_{GE}=15 V
3. Pulse width limited by max junction temperature allowed

Table 3. Thermal resistance

Symbol	Parameter	Value		Unit
		TO-247	TO-220 D²PAK	
$R_{thj-case}$	Thermal resistance junction-case max	0.62		°C/W
$R_{thj-amb}$	Thermal resistance junction-ambient max	50	62.5	°C/W

2 Electrical characteristics

(T_{CASE}=25°C unless otherwise specified)

Table 4. Static electrical characteristics

Symbol	Parameter	Test conditions	Min.	Typ.	Max.	Unit
$V_{(BR)CES}$	Collector-emitter breakdown voltage (V_{GE} = 0)	I_C = 1 mA	600			V
$V_{CE(sat)}$	Collector-emitter saturation voltage	V_{GE}=15 V, I_C= 20 A V_{GE}=15 V, I_C= 20 A,T_C= 125 °C		1.8 1.7	2.5	V V
$V_{GE(th)}$	Gate threshold voltage	V_{CE}= V_{GE}, I_C= 250 µA	3.75		5.75	V
I_{CES}	Collector-emitter cut-off current (V_{GE} = 0)	V_{CE} = 600 V V_{CE} = 600 V, Tc=125 °C			10 1	µA mA
I_{GES}	Gate-emitter cut-off current (V_{CE} = 0)	V_{GE} = ±20 V			± 100	nA
g_{fs} (1)	Forward transconductance	V_{CE} = 15 V, I_C= 20 A		15		S

1. Pulse duration = 300 µs, duty cycle 1.5%

Table 5. Dynamic electrical characteristics

Symbol	Parameter	Test conditions	Min.	Typ.	Max.	Unit
C_{ies} C_{oes} C_{res}	Input capacitance Output capacitance Reverse transfer capacitance	V_{CE} = 25 V, f = 1 MHz, V_{GE}=0		2200 225 50		pF pF pF
Q_g Q_{ge} Q_{gc}	Total gate charge Gate-emitter charge Gate-collector charge	V_{CE} = 390 V, I_C = 20 A, V_{GE} = 15 V, *(see Figure 17)*		100 16 45		nC nC nC

Table 6. Switching on/off (inductive load)

Symbol	Parameter	Test conditions	Min.	Typ.	Max.	Unit
$t_{d(on)}$ t_r $(di/dt)_{on}$	Turn-on delay time Current rise time Turn-on current slope	V_{CC} = 390 V, I_C = 20 A R_G= 3.3 Ω, V_{GE}= 15 V, *(see Figure 16)*		31 11 1600		ns ns A/µs
$t_{d(on)}$ t_r $(di/dt)_{on}$	Turn-on delay time Current rise time Turn-on current slope	V_{CC} = 390 V, I_C = 20 A R_G= 3.3 Ω, V_{GE}= 15 V, T_C= 125 °C *(see Figure 16)*		31 11.5 1500		ns ns A/µs
$t_r(V_{off})$ $t_d(_{off})$ t_f	Off voltage rise time Turn-off delay time Current fall time	V_{cc} = 390 V, I_C = 20 A, R_G = 3.3 Ω, V_{GE} = 15 V *(see Figure 18)*		28 100 75		ns ns ns
$t_r(V_{off})$ $t_d(_{off})$ t_f	Off voltage rise time Turn-off delay time Current fall time	V_{cc} = 390 V, I_C = 20 A, R_G=3.3 Ω, V_{GE} =15 V, T_C=125 °C *(see Figure 18)*		66 150 130		ns ns ns

Table 7. Switching energy (inductive load)

Symbol	Parameter	Test conditions	Min.	Typ.	Max.	Unit
E_{on} E_{off}(1) E_{ts}	Turn-on switching losses Turn-off switching losses Total switching losses	V_{CC} = 390 V, I_C = 20 A R_G= 3.3 Ω, V_{GE}= 15 V, *(see Figure 18)*		220 330 550		µJ µJ µJ
E_{on} E_{off}(1) E_{ts}	Turn-on switching losses Turn-off switching losses Total switching losses	V_{CC} = 390 V, I_C = 20 A R_G= 3.3 Ω, V_{GE}= 15 V, T_C= 125 °C *(see Figure 18)*		450 770 1220		µJ µJ µJ

1. Turn-off losses include also the tail of the collector current

2.1 Electrical characteristics (curves)

Figure 2. Output characteristics

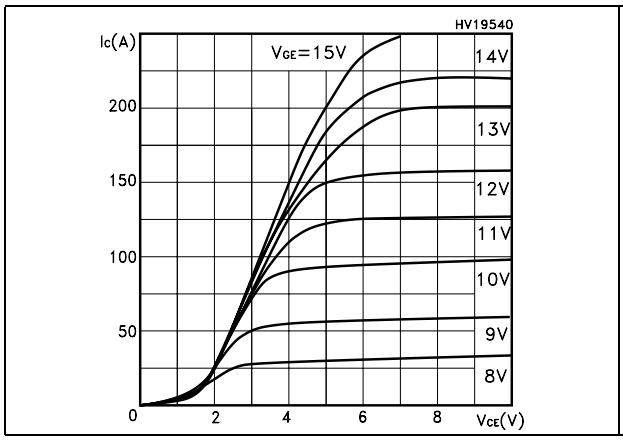

Figure 3. Transfer characteristics

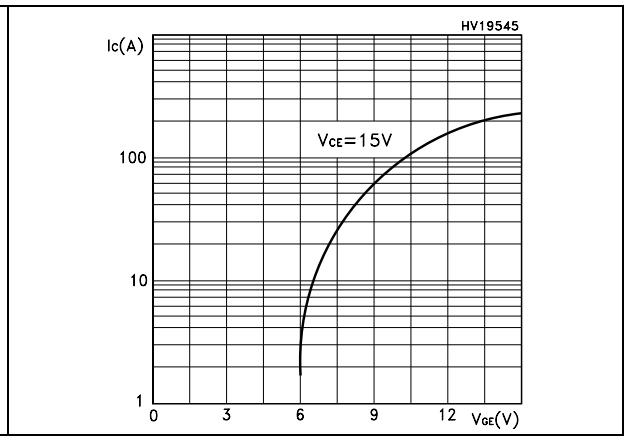

Figure 4. Transconductance

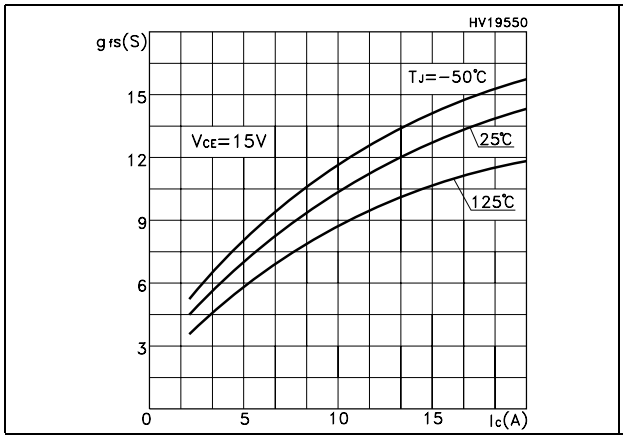

Figure 5. Collector-emitter on voltage vs temperature

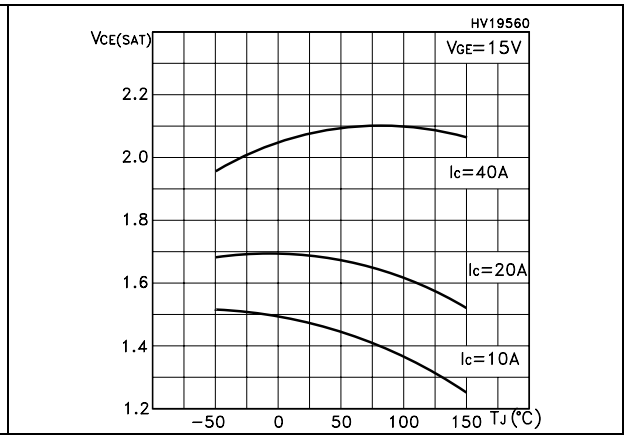

Figure 6. Gate charge vs gate-source voltage

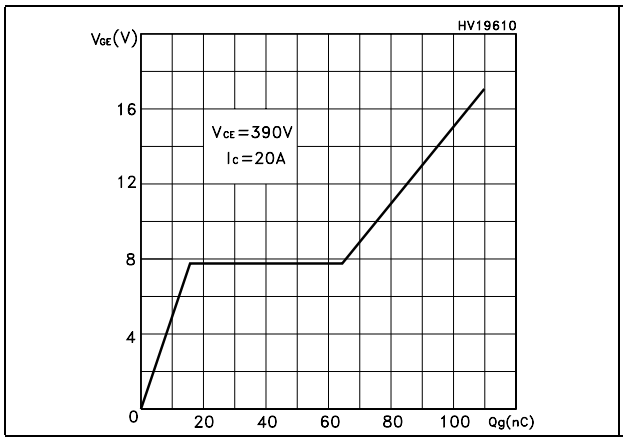

Figure 7. Capacitance variations

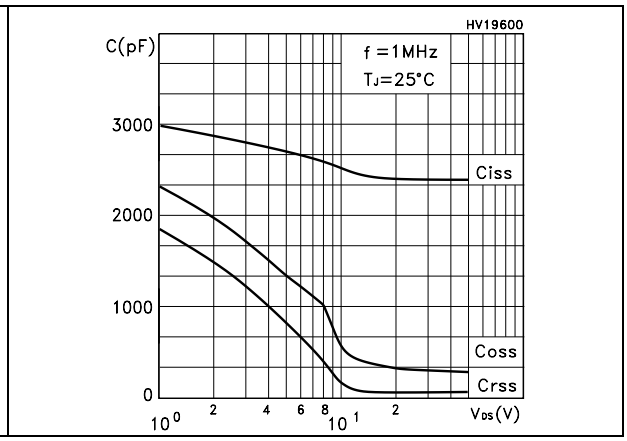

Figure 8. Normalized gate threshold voltage vs temperature

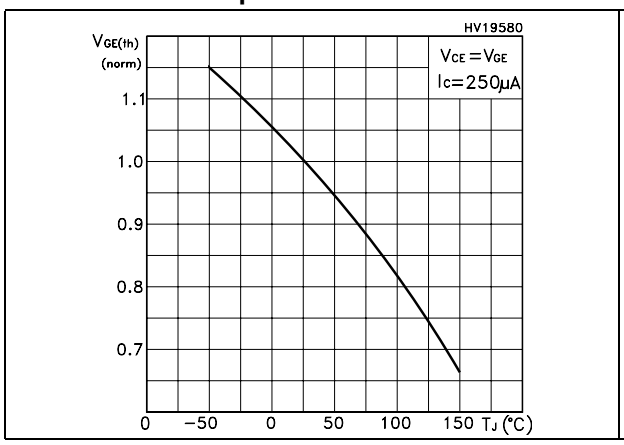

Figure 9. Collector-emitter on voltage vs collector current

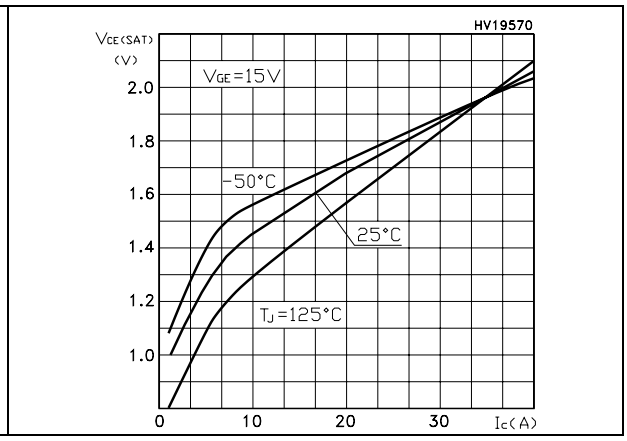

Figure 10. Normalized breakdown voltage vs temperature

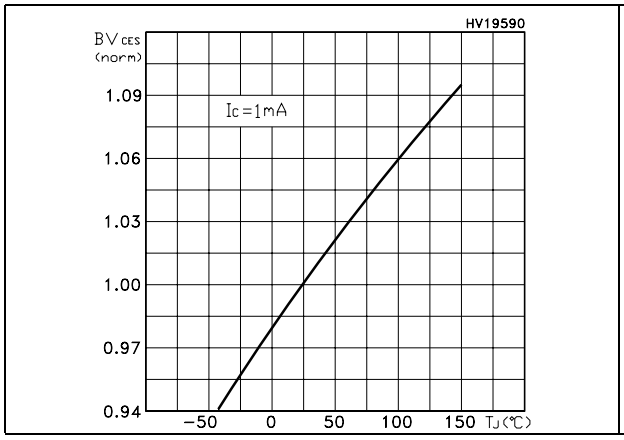

Figure 11. Switching losses vs temperature

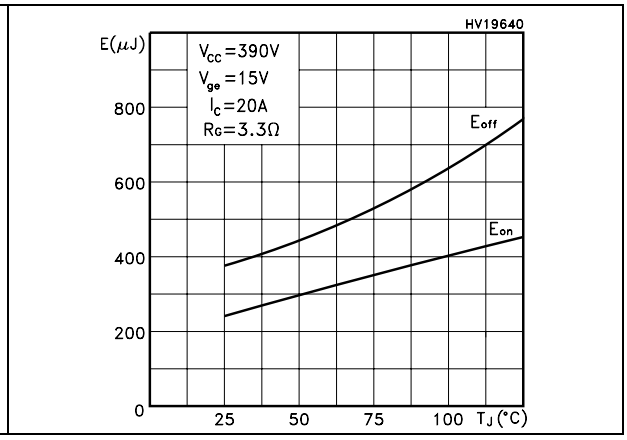

Figure 12. Switching losses vs gate resistance

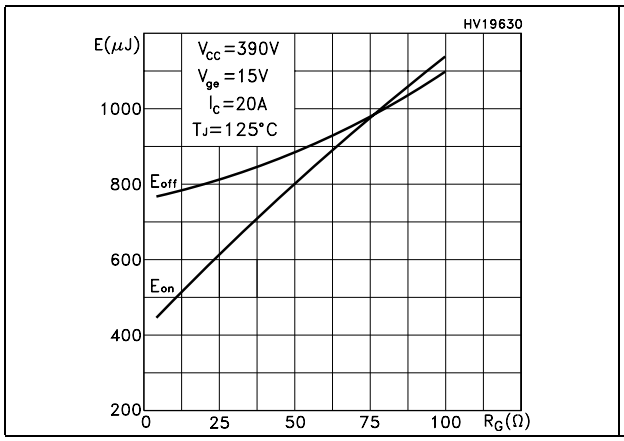

Figure 13. Switching losses vs collector current

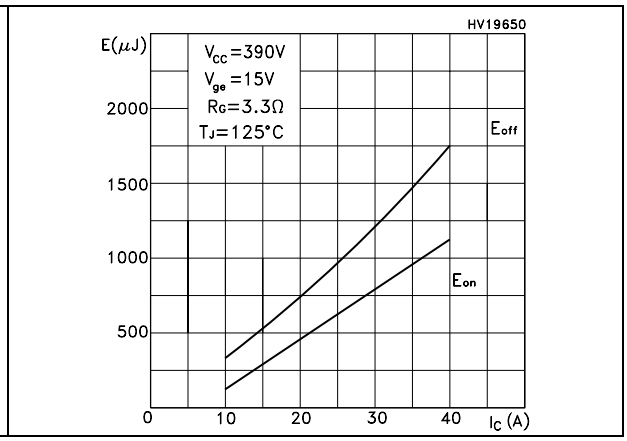

Figure 14. Thermal impedance

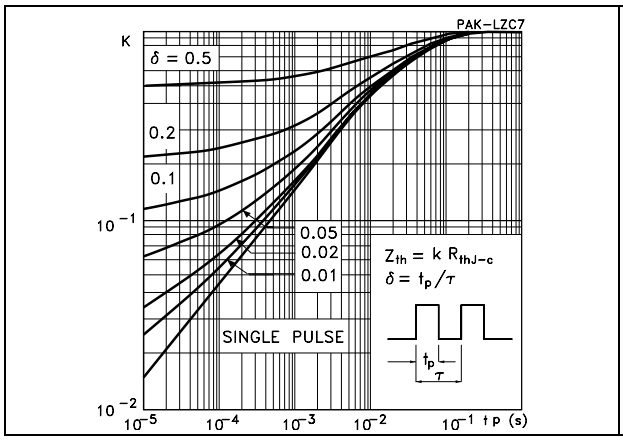

Figure 15. Turn-off SOA

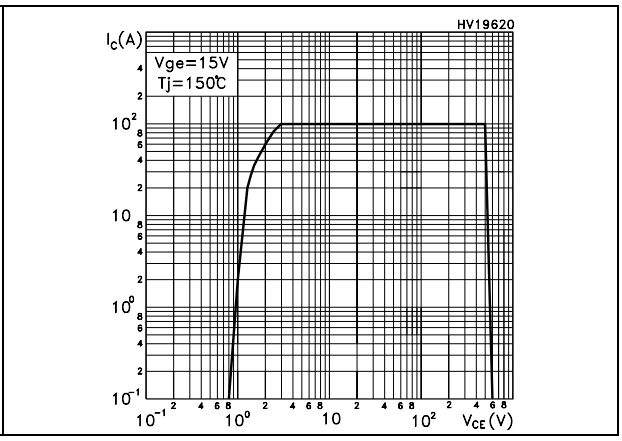

3 Test circuit

Figure 16. Test circuit for inductive load switching

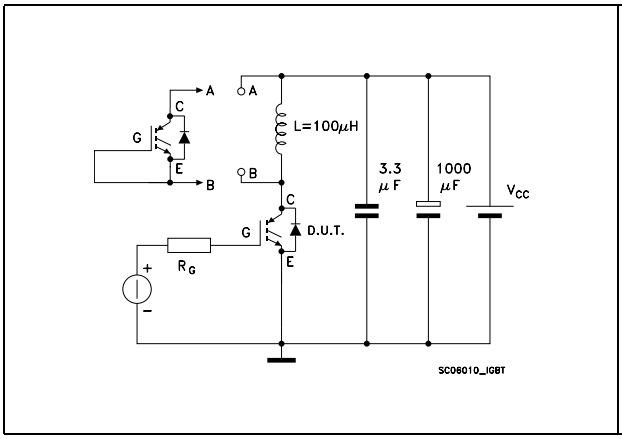

Figure 17. Gate charge test circuit

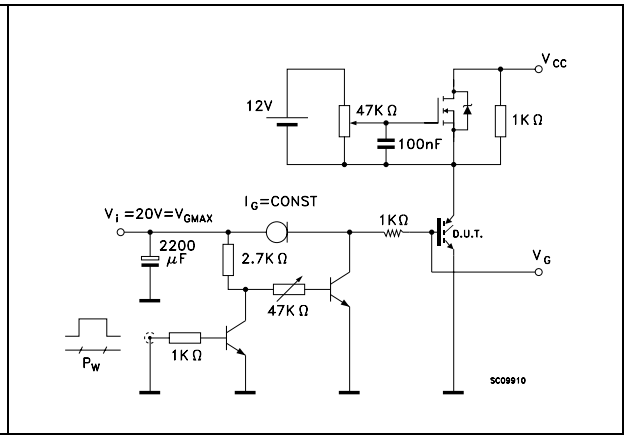

Figure 18. Switching waveform

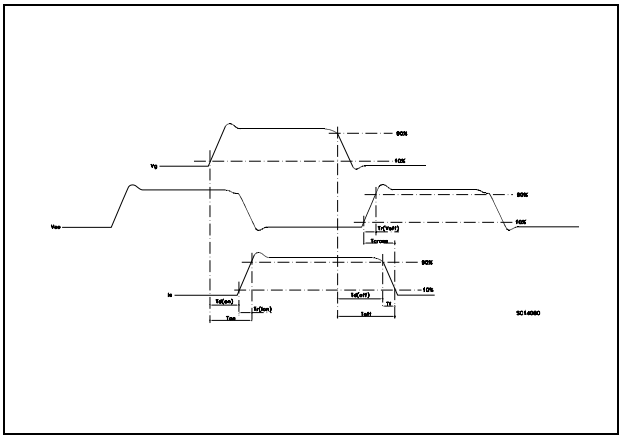

4 Package mechanical data

In order to meet environmental requirements, ST offers these devices in ECOPACK® packages. These packages have a lead-free second level interconnect. The category of second level interconnect is marked on the package and on the inner box label, in compliance with JEDEC Standard JESD97. The maximum ratings related to soldering conditions are also marked on the inner box label. ECOPACK is an ST trademark. ECOPACK specifications are available at: *www.st.com*

TO-220 mechanical data

Dim	mm			inch		
	Min	Typ	Max	Min	Typ	Max
A	4.40		4.60	0.173		0.181
b	0.61		0.88	0.024		0.034
b1	1.14		1.70	0.044		0.066
c	0.48		0.70	0.019		0.027
D	15.25		15.75	0.6		0.62
D1		1.27			0.050	
E	10		10.40	0.393		0.409
e	2.40		2.70	0.094		0.106
e1	4.95		5.15	0.194		0.202
F	1.23		1.32	0.048		0.051
H1	6.20		6.60	0.244		0.256
J1	2.40		2.72	0.094		0.107
L	13		14	0.511		0.551
L1	3.50		3.93	0.137		0.154
L20		16.40			0.645	
L30		28.90			1.137	
∅P	3.75		3.85	0.147		0.151
Q	2.65		2.95	0.104		0.116

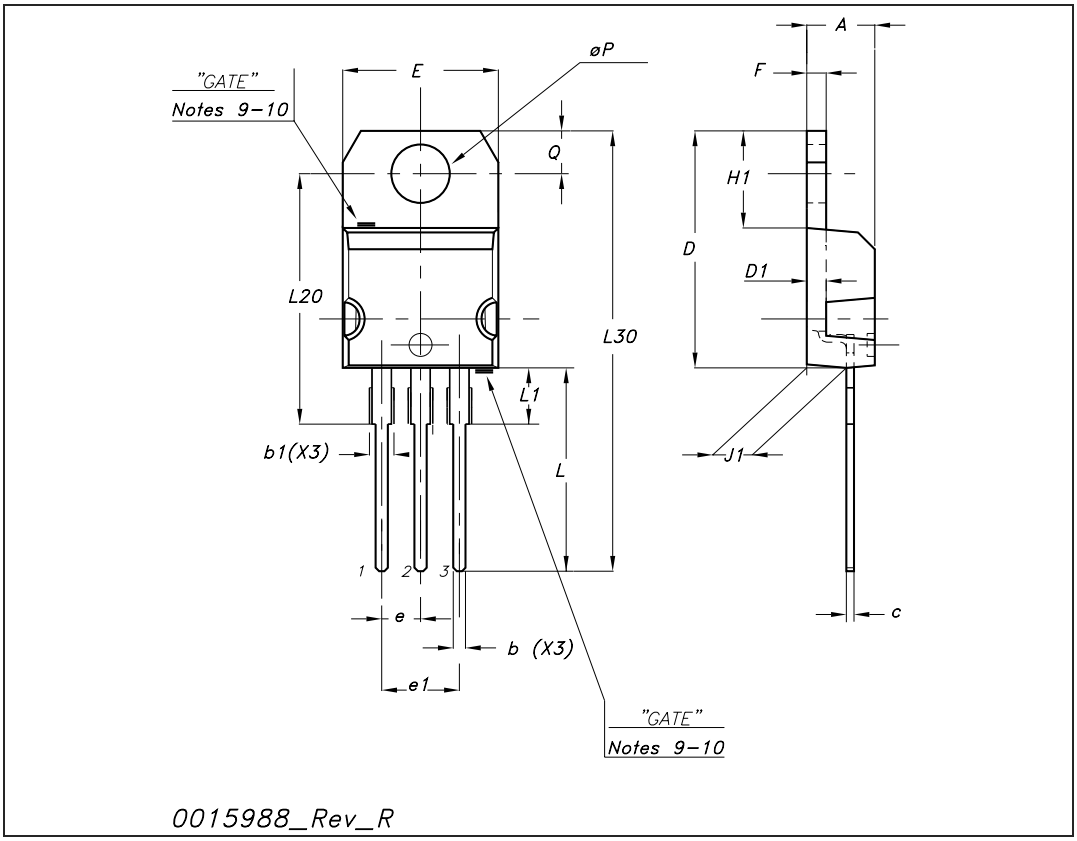

TO-247 Mechanical data

Dim.	mm.		
	Min.	Typ	Max.
A	4.85		5.15
A1	2.20		2.60
b	1.0		1.40
b1	2.0		2.40
b2	3.0		3.40
c	0.40		0.80
D	19.85		20.15
E	15.45		15.75
e		5.45	
L	14.20		14.80
L1	3.70		4.30
L2		18.50	
øP	3.55		3.65
øR	4.50		5.50
S		5.50	

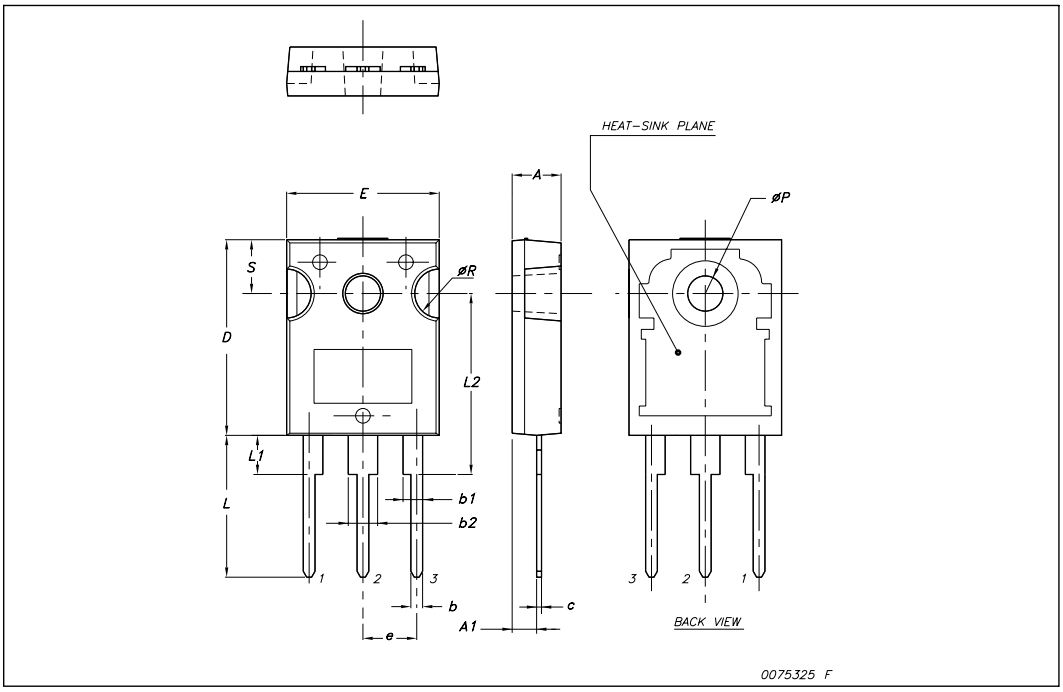

D²PAK (TO-263) mechanical data

Dim	mm			inch		
	Min	Typ	Max	Min	Typ	Max
A	4.40		4.60	0.173		0.181
A1	0.03		0.23	0.001		0.009
b	0.70		0.93	0.027		0.037
b2	1.14		1.70	0.045		0.067
c	0.45		0.60	0.017		0.024
c2	1.23		1.36	0.048		0.053
D	8.95		9.35	0.352		0.368
D1	7.50			0.295		
E	10		10.40	0.394		0.409
E1	8.50			0.334		
e		2.54			0.1	
e1	4.88		5.28	0.192		0.208
H	15		15.85	0.590		0.624
J1	2.49		2.69	0.099		0.106
L	2.29		2.79	0.090		0.110
L1	1.27		1.40	0.05		0.055
L2	1.30		1.75	0.051		0.069
R		0.4			0.016	
V2	0°		8°	0°		8°

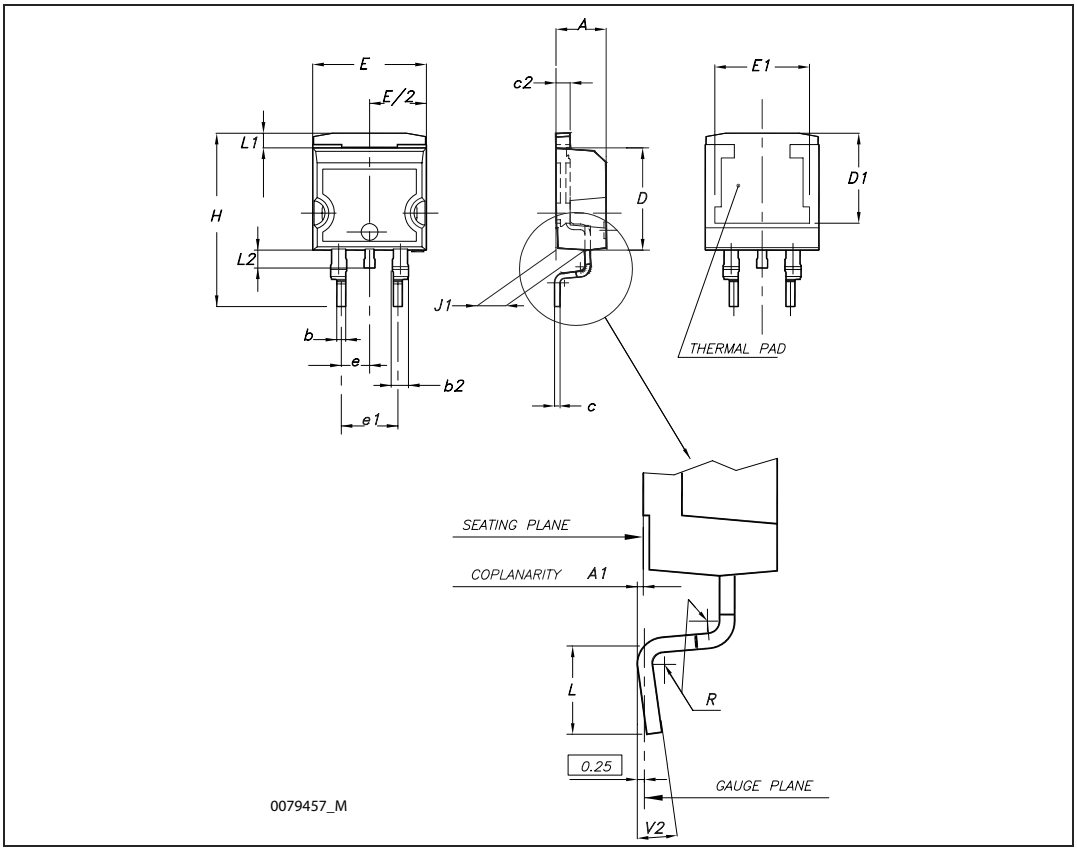

5 Packaging mechanical data

D²PAK FOOTPRINT

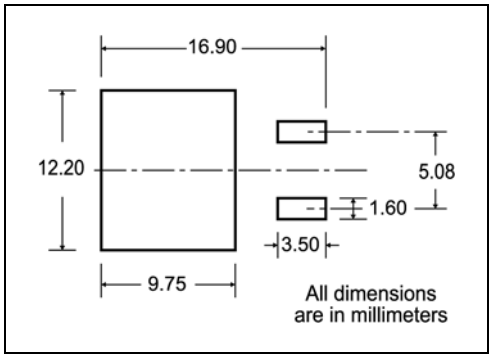

TAPE AND REEL SHIPMENT

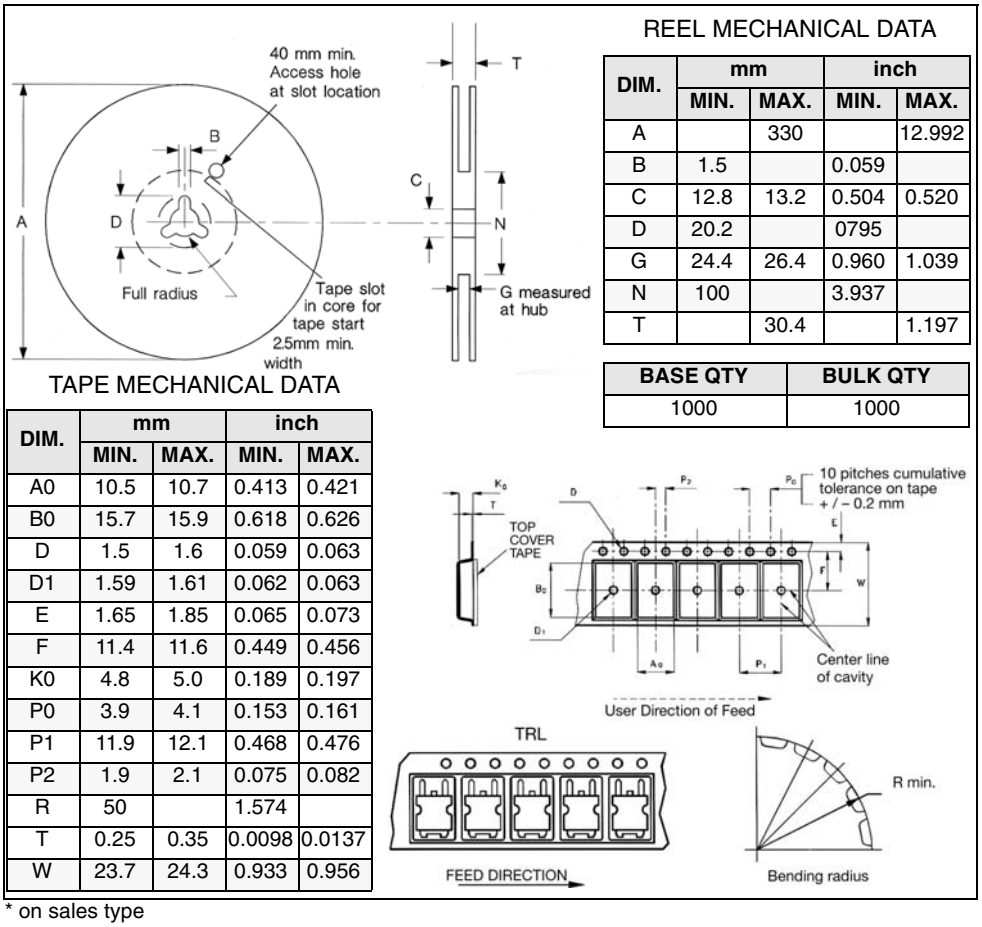

REEL MECHANICAL DATA

DIM.	mm		inch	
	MIN.	MAX.	MIN.	MAX.
A		330		12.992
B	1.5		0.059	
C	12.8	13.2	0.504	0.520
D	20.2		0795	
G	24.4	26.4	0.960	1.039
N	100		3.937	
T		30.4		1.197

BASE QTY	BULK QTY
1000	1000

TAPE MECHANICAL DATA

DIM.	mm		inch	
	MIN.	MAX.	MIN.	MAX.
A0	10.5	10.7	0.413	0.421
B0	15.7	15.9	0.618	0.626
D	1.5	1.6	0.059	0.063
D1	1.59	1.61	0.062	0.063
E	1.65	1.85	0.065	0.073
F	11.4	11.6	0.449	0.456
K0	4.8	5.0	0.189	0.197
P0	3.9	4.1	0.153	0.161
P1	11.9	12.1	0.468	0.476
P2	1.9	2.1	0.075	0.082
R	50		1.574	
T	0.25	0.35	0.0098	0.0137
W	23.7	24.3	0.933	0.956

* on sales type

6 Revision history

Table 8. Document revision history

Date	Revision	Changes
07-Jun-2004	4	Stylesheet update. No content change
14-May-2008	5	Inserted D^2PAK

Please Read Carefully:

Information in this document is provided solely in connection with ST products. STMicroelectronics NV and its subsidiaries (“ST”) reserve the right to make changes, corrections, modifications or improvements, to this document, and the products and services described herein at any time, without notice.

All ST products are sold pursuant to ST’s terms and conditions of sale.

Purchasers are solely responsible for the choice, selection and use of the ST products and services described herein, and ST assumes no liability whatsoever relating to the choice, selection or use of the ST products and services described herein.

No license, express or implied, by estoppel or otherwise, to any intellectual property rights is granted under this document. If any part of this document refers to any third party products or services it shall not be deemed a license grant by ST for the use of such third party products or services, or any intellectual property contained therein or considered as a warranty covering the use in any manner whatsoever of such third party products or services or any intellectual property contained therein.

UNLESS OTHERWISE SET FORTH IN ST’S TERMS AND CONDITIONS OF SALE ST DISCLAIMS ANY EXPRESS OR IMPLIED WARRANTY WITH RESPECT TO THE USE AND/OR SALE OF ST PRODUCTS INCLUDING WITHOUT LIMITATION IMPLIED WARRANTIES OF MERCHANTABILITY, FITNESS FOR A PARTICULAR PURPOSE (AND THEIR EQUIVALENTS UNDER THE LAWS OF ANY JURISDICTION), OR INFRINGEMENT OF ANY PATENT, COPYRIGHT OR OTHER INTELLECTUAL PROPERTY RIGHT.

UNLESS EXPRESSLY APPROVED IN WRITING BY AN AUTHORIZED ST REPRESENTATIVE, ST PRODUCTS ARE NOT RECOMMENDED, AUTHORIZED OR WARRANTED FOR USE IN MILITARY, AIR CRAFT, SPACE, LIFE SAVING, OR LIFE SUSTAINING APPLICATIONS, NOR IN PRODUCTS OR SYSTEMS WHERE FAILURE OR MALFUNCTION MAY RESULT IN PERSONAL INJURY, DEATH, OR SEVERE PROPERTY OR ENVIRONMENTAL DAMAGE. ST PRODUCTS WHICH ARE NOT SPECIFIED AS "AUTOMOTIVE GRADE" MAY ONLY BE USED IN AUTOMOTIVE APPLICATIONS AT USER’S OWN RISK.

Resale of ST products with provisions different from the statements and/or technical features set forth in this document shall immediately void any warranty granted by ST for the ST product or service described herein and shall not create or extend in any manner whatsoever, any liability of ST.

ST and the ST logo are trademarks or registered trademarks of ST in various countries.

Information in this document supersedes and replaces all information previously supplied.

The ST logo is a registered trademark of STMicroelectronics. All other names are the property of their respective owners.

© 2008 STMicroelectronics - All rights reserved

STMicroelectronics group of companies

Australia - Belgium - Brazil - Canada - China - Czech Republic - Finland - France - Germany - Hong Kong - India - Israel - Italy - Japan - Malaysia - Malta - Morocco - Singapore - Spain - Sweden - Switzerland - United Kingdom - United States of America

www.st.com