International
IOR Rectifier

PD - 95788B

IRG4BC40WSPbF
IRG4BC40WLPbF

INSULATED GATE BIPOLAR TRANSISTOR

Features

- Designed expressly for Switch-Mode Power Supply and PFC (power factor correction) applications
- Industry-benchmark switching losses improve efficiency of all power supply topologies
- 50% reduction of Eoff parameter
- Low IGBT conduction losses
- Latest-generation IGBT design and construction offers tighter parameters distribution, exceptional reliability
- Lead-Free

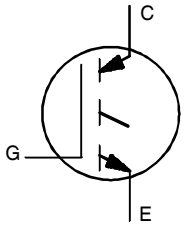

n-channel

V_{CES} = 600V

$V_{CE(on)\ typ.}$ = 2.05V

@V_{GE} = 15V, I_C = 20A

Benefits

- Lower switching losses allow more cost-effective operation than power MOSFETs up to 150 kHz ("hard switched" mode)
- Of particular benefit to single-ended converters and boost PFC topologies 150W and higher
- Low conduction losses and minimal minority-carrier recombination make these an excellent option for resonant mode switching as well (up to >>300 kHz)

D^2Pak
IRG4BC40WSPbF

TO-262
IRG4BC40WLPbF

Absolute Maximum Ratings

	Parameter	Max.	Units
V_{CES}	Collector-to-Emitter Breakdown Voltage	600	V
I_C @ T_C = 25°C	Continuous Collector Current	40	A
I_C @ T_C = 100°C	Continuous Collector Current	20	
I_{CM}	Pulsed Collector Current ①	160	
I_{LM}	Clamped Inductive Load Current ②	160	
V_{GE}	Gate-to-Emitter Voltage	± 20	V
E_{ARV}	Reverse Voltage Avalanche Energy ③	160	mJ
P_D @ T_C = 25°C	Maximum Power Dissipation	160	W
P_D @ T_C = 100°C	Maximum Power Dissipation	65	
T_J T_{STG}	Operating Junction and Storage Temperature Range	-55 to + 150	°C
	Soldering Temperature, for 10 seconds	300 (0.063 in. (1.6mm) from case)	

Thermal Resistance

	Parameter	Typ.	Max.	Units
$R_{\theta JC}$	Junction-to-Case	–––	0.77	°C/W
$R_{\theta CS}$	Case-to-Sink, Flat, Greased Surface	0.5	–––	
$R_{\theta JA}$	Junction-to-Ambient (PCB Mounted steady-state)	–––	40	
Wt	Weight	2.0 (0.07)	–––	g (oz)

Electrical Characteristics @ T_J = 25°C (unless otherwise specified)

	Parameter	Min.	Typ.	Max.	Units	Conditions
$V_{(BR)CES}$	Collector-to-Emitter Breakdown Voltage	600	—	—	V	V_{GE} = 0V, I_C = 250µA
$V_{(BR)ECS}$	Emitter-to-Collector Breakdown Voltage ④	18	—	—	V	V_{GE} = 0V, I_C = 1.0A
$\Delta V_{(BR)CES}/\Delta T_J$	Temperature Coeff. of Breakdown Voltage	—	0.44	—	V/°C	V_{GE} = 0V, I_C = 1.0mA
$V_{CE(ON)}$	Collector-to-Emitter Saturation Voltage	—	2.05	2.5	V	I_C = 20A V_{GE} = 15V
		—	2.36	—		I_C = 40A See Fig.2, 5
		—	1.90	—		I_C = 20A , T_J = 150°C
$V_{GE(th)}$	Gate Threshold Voltage	3.0	—	6.0		V_{CE} = V_{GE}, I_C = 250µA
$\Delta V_{GE(th)}/\Delta T_J$	Temperature Coeff. of Threshold Voltage	—	13	—	mV/°C	V_{CE} = V_{GE}, I_C = 250µA
g_{fe}	Forward Transconductance ⑤	18	28	—	S	V_{CE} = 100 V, I_C =20A
I_{CES}	Zero Gate Voltage Collector Current	—	—	250	µA	V_{GE} = 0V, V_{CE} = 600V
		—	—	2.0		V_{GE} = 0V, V_{CE} = 10V, T_J = 25°C
		—	—	2500		V_{GE} = 0V, V_{CE} = 600V, T_J = 150°C
I_{GES}	Gate-to-Emitter Leakage Current	—	—	±100	nA	V_{GE} = ±20V

Switching Characteristics @ T_J = 25°C (unless otherwise specified)

	Parameter	Min.	Typ.	Max.	Units	Conditions
Q_g	Total Gate Charge (turn-on)	—	98	147	nC	I_C =20A
Q_{ge}	Gate - Emitter Charge (turn-on)	—	12	18		V_{CC} = 400V See Fig.8
Q_{gc}	Gate - Collector Charge (turn-on)	—	36	54		V_{GE} = 15V
$t_{d(on)}$	Turn-On Delay Time	—	27	—	ns	
t_r	Rise Time	—	22	—		T_J = 25°C
$t_{d(off)}$	Turn-Off Delay Time	—	100	150		I_C = 20A, V_{CC} = 480V
t_f	Fall Time	—	74	110		V_{GE} = 15V, R_G = 10Ω
E_{on}	Turn-On Switching Loss	—	0.11	—	mJ	Energy losses include "tail"
E_{off}	Turn-Off Switching Loss	—	0.23	—		See Fig. 9,10, 14
E_{ts}	Total Switching Loss	—	0.34	0.45		
$t_{d(on)}$	Turn-On Delay Time	—	25	—	ns	T_J = 150°C,
t_r	Rise Time	—	23	—		I_C = 20A, V_{CC} = 480V
$t_{d(off)}$	Turn-Off Delay Time	—	170	—		V_{GE} = 15V, R_G = 10Ω
t_f	Fall Time	—	124	—		Energy losses include "tail"
E_{ts}	Total Switching Loss	—	0.85	—	mJ	See Fig. 10,11, 14
L_E	Internal Emitter Inductance	—	7.5	—	nH	Measured 5mm from package
C_{ies}	Input Capacitance	—	1900	—	pF	V_{GE} = 0V
C_{oes}	Output Capacitance	—	140	—		V_{CC} = 30V See Fig. 7
C_{res}	Reverse Transfer Capacitance	—	35	—		f = 1.0MHz

Notes:

① Repetitive rating; V_{GE} = 20V, pulse width limited by max. junction temperature. (See fig. 13b)

② V_{CC} = 80%(V_{CES}), V_{GE} = 20V, L = 10µH, R_G = 10Ω, (See fig. 13a)

③ Repetitive rating; pulse width limited by maximum junction temperature.

④ Pulse width ≤ 80µs; duty factor ≤ 0.1%.

⑤ Pulse width 5.0µs, single shot.

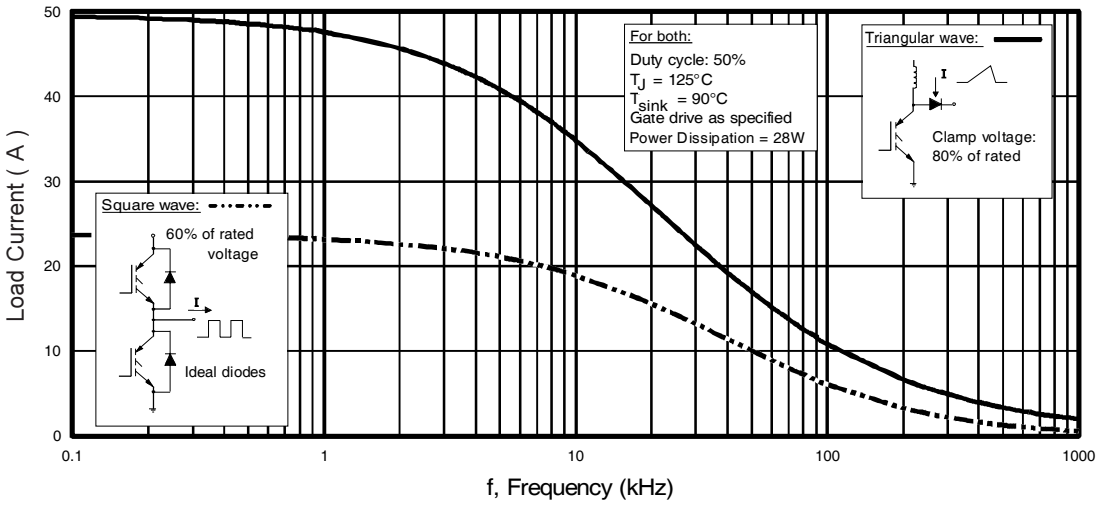

Fig. 1 - Typical Load Current vs. Frequency
(Load Current = I_{RMS} of fundamental)

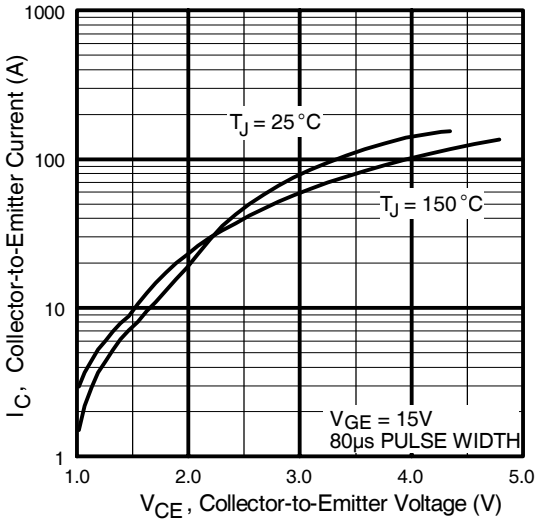

Fig. 2 - Typical Output Characteristics

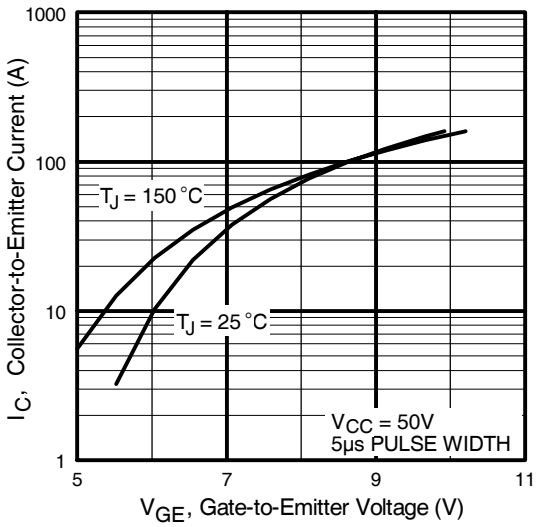

Fig. 3 - Typical Transfer Characteristics

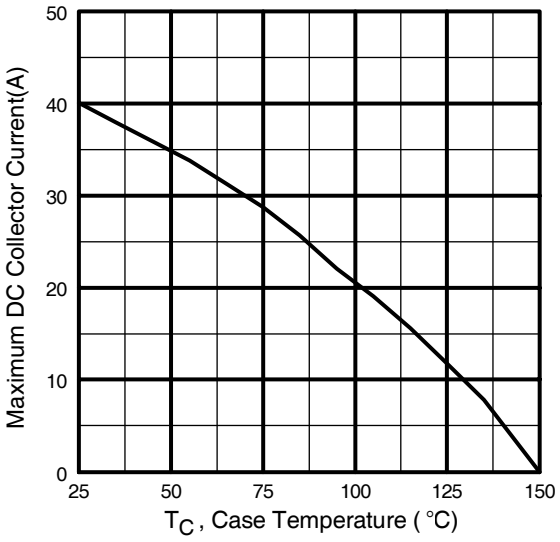

Fig. 4 - Maximum Collector Current vs. Case Temperature

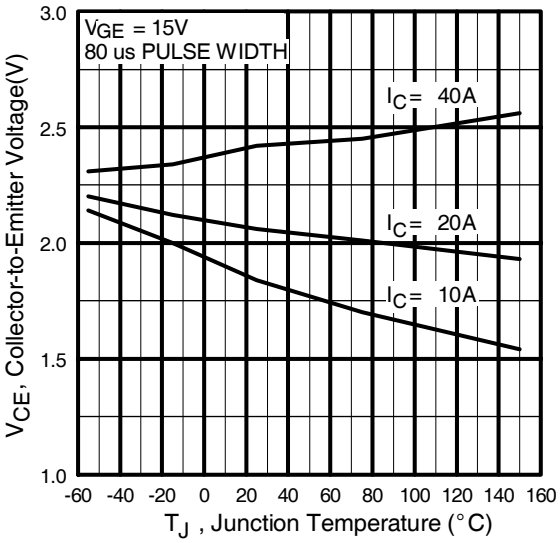

Fig. 5 - Typical Collector-to-Emitter Voltage vs. Junction Temperature

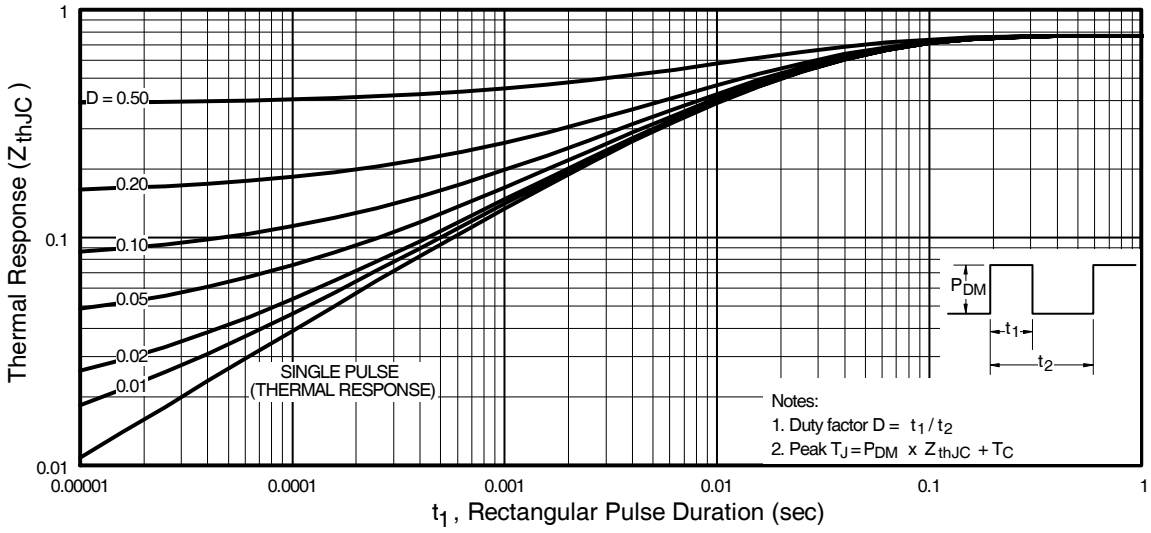

Fig. 6 - Maximum Effective Transient Thermal Impedance, Junction-to-Case

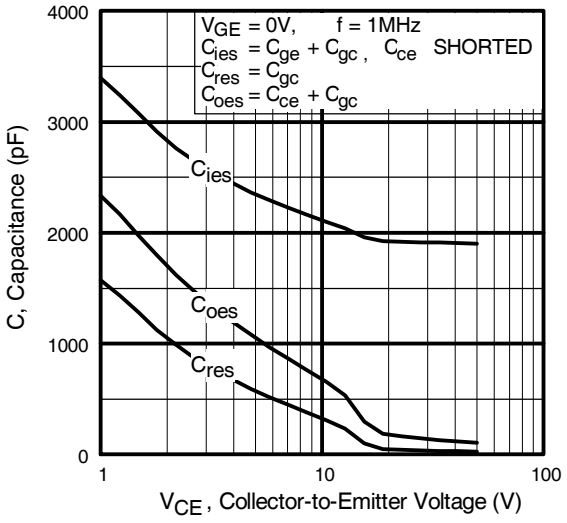

Fig. 7 - Typical Capacitance vs. Collector-to-Emitter Voltage

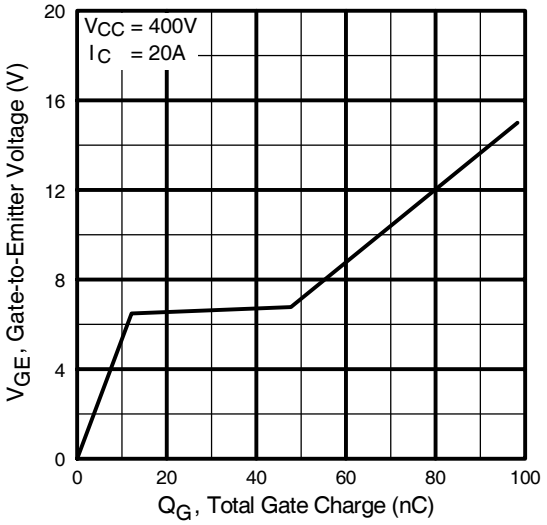

Fig. 8 - Typical Gate Charge vs. Gate-to-Emitter Voltage

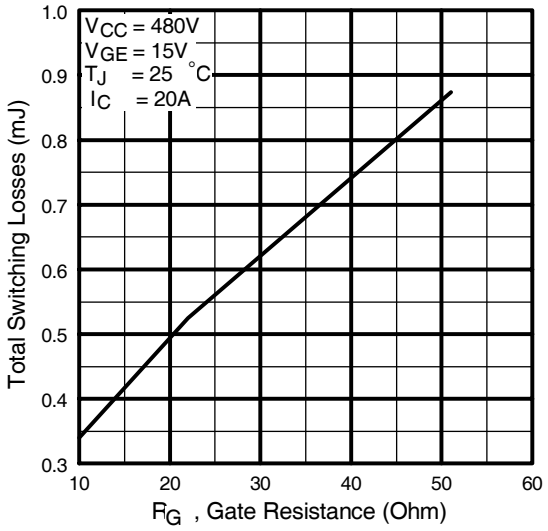

Fig. 9 - Typical Switching Losses vs. Gate Resistance

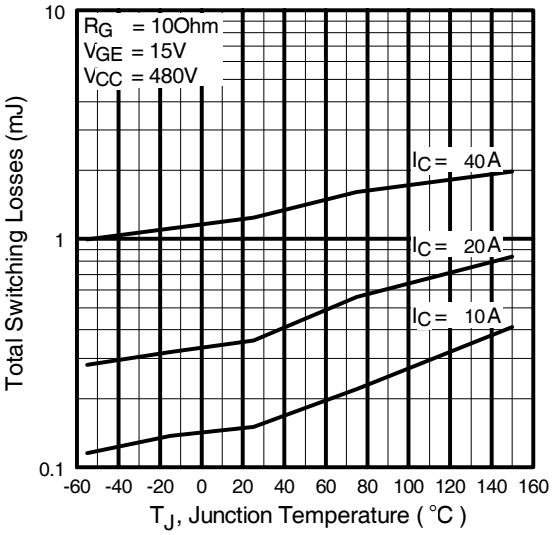

Fig. 10 - Typical Switching Losses vs. Junction Temperature

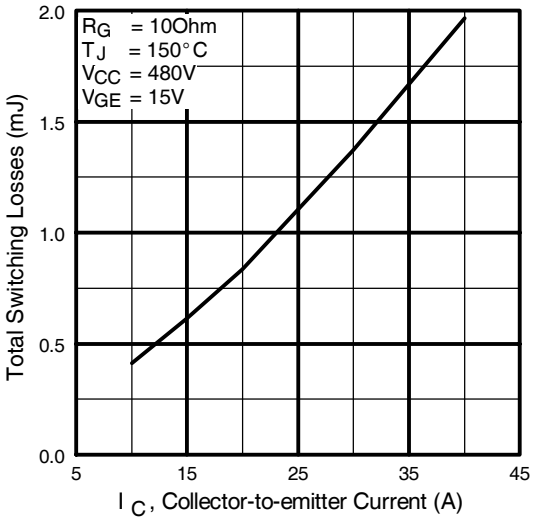

Fig. 11 - Typical Switching Losses vs. Collector-to-Emitter Current

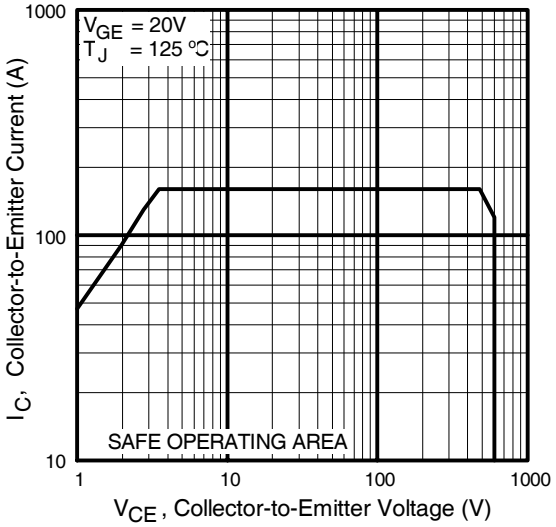

Fig. 12 - Turn-Off SOA

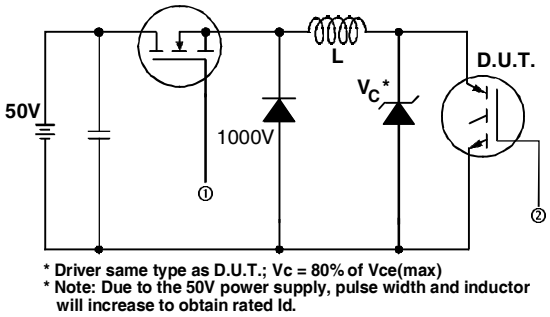

* Driver same type as D.U.T.; Vc = 80% of Vce(max)
* Note: Due to the 50V power supply, pulse width and inductor will increase to obtain rated Id.

Fig. 13a - Clamped Inductive Load Test Circuit

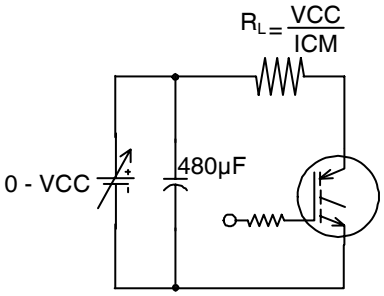

Pulsed Collector Current Test Circuit

Fig. 13b - Pulsed Collector Current Test Circuit

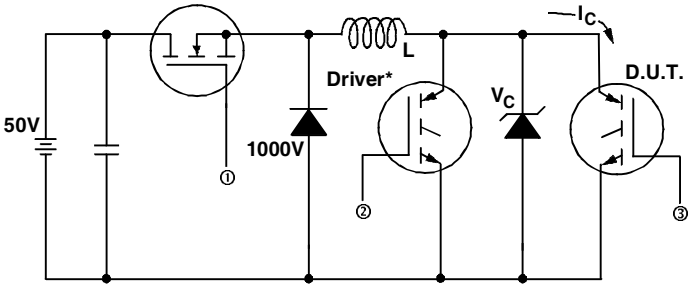

Fig. 14a - Switching Loss Test Circuit

*** Driver same type as D.U.T., VC = 480V**

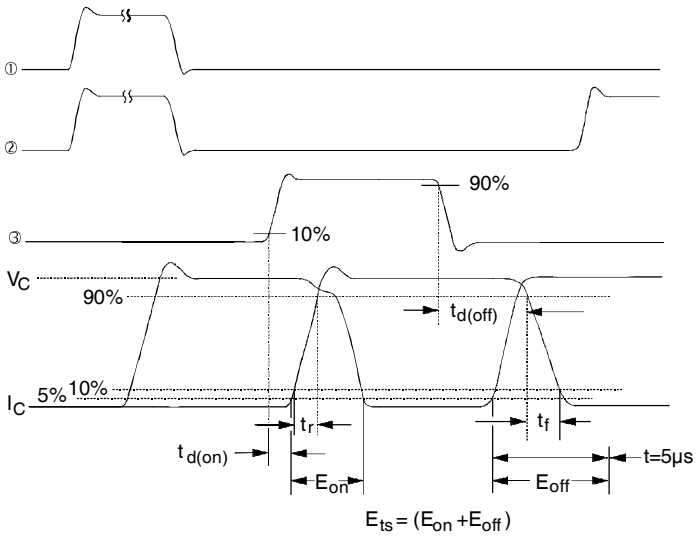

Fig. 14b - Switching Loss Waveforms

International
IOR Rectifier

D²Pak Package Outline

Dimensions are shown in millimeters (inches)

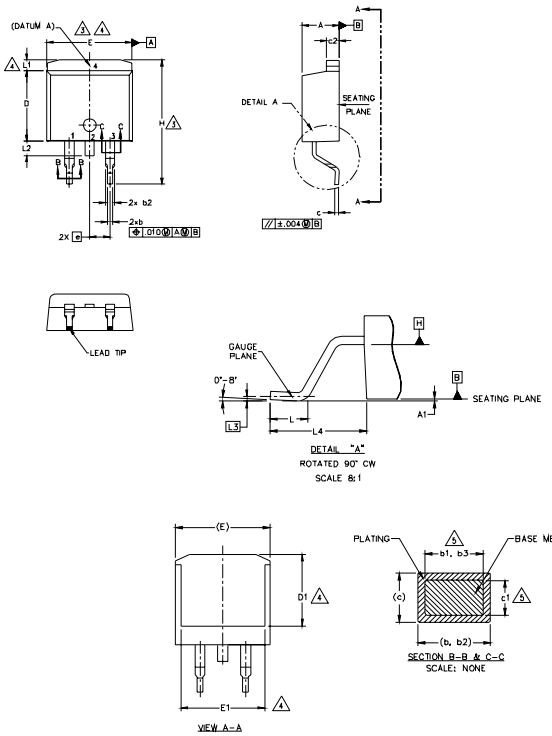

SYMBOL	DIMENSIONS				NOTES
	MILLIMETERS		INCHES		
	MIN.	MAX.	MIN.	MAX.	
A	4.06	4.83	.160	.190	
A1	0.00	0.254	.000	.010	
b	0.51	0.99	.020	.039	
b1	0.51	0.89	.020	.035	5
b2	1.14	1.78	.045	.070	
b3	1.14	1.73	.045	.068	5
c	0.38	0.74	.015	.029	
c1	0.38	0.58	.015	.023	5
c2	1.14	1.65	.045	.065	
D	8.38	9.65	.330	.380	3
D1	6.86	–	.270		4
E	9.65	10.67	.380	.420	3,4
E1	6.22	–	.245		4
e	2.54 BSC		.100 BSC		
H	14.61	15.88	.575	.625	
L	1.78	2.79	.070	.110	
L1	–	1.65	–	.066	4
L2	–	1.78	–	.070	
L3	0.25 BSC		.010 BSC		
L4	4.78	5.28	.188	.208	

NOTES:

1. DIMENSIONING AND TOLERANCING PER ASME Y14.5M-1994
2. DIMENSIONS ARE SHOWN IN MILLIMETERS [INCHES].
3. DIMENSION D & E DO NOT INCLUDE MOLD FLASH. MOLD FLASH SHALL NOT EXCEED 0.127 [.005"] PER SIDE. THESE DIMENSIONS ARE MEASURED AT THE OUTMOST EXTREMES OF THE PLASTIC BODY AT DATUM H.
4. THERMAL PAD CONTOUR OPTIONAL WITHIN DIMENSION E, L1, D1 & E1.
5. DIMENSION b1 AND c1 APPLY TO BASE METAL ONLY.
6. DATUM A & B TO BE DETERMINED AT DATUM PLANE H.
7. CONTROLLING DIMENSION: INCH.
8. OUTLINE CONFORMS TO JEDEC OUTLINE TO-263AB.

LEAD ASSIGNMENTS

DIODES

1.- ANODE (TWO DIE) / OPEN (ONE DIE)
2, 4.- CATHODE
3.- ANODE

HEXFET

1.- GATE
2, 4.- DRAIN
3.- SOURCE

IGBTs, CoPACK

1.- GATE
2, 4.- COLLECTOR
3.- EMITTER

D²Pak Part Marking Information

EXAMPLE: THIS IS AN IRF530S WITH
LOT CODE 8024
ASSEMBLED ON WW 02, 2000
IN THE ASSEMBLY LINE 'L'

Note: 'P' in assembly line position indicates 'Lead-Free'

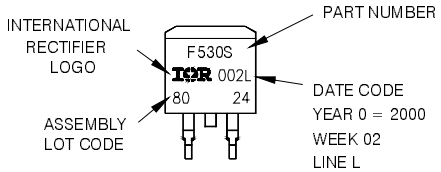

OR

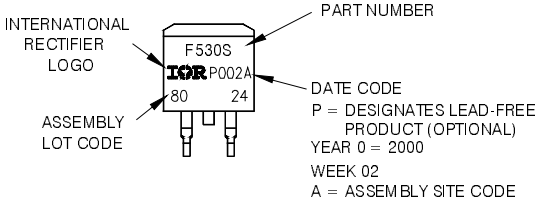

Note: For the most current drawing please refer to IR website at http://www.irf.com/package/pkigbt.html

TO-262 Package Outline

Dimensions are shown in millimeters (inches)

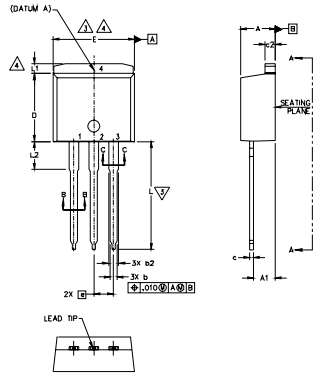

SYMBOL	DIMENSIONS				NOTES
	MILLIMETERS		INCHES		
	MIN.	MAX.	MIN.	MAX.	
A	4.06	4.83	.160	.190	
A1	2.03	3.02	.080	.119	
b	0.51	0.99	.020	.039	
b1	0.51	0.89	.020	.035	5
b2	1.14	1.78	.045	.070	
b3	1.14	1.73	.045	.068	5
c	0.38	0.74	.015	.029	
c1	0.38	0.58	.015	.023	5
c2	1.14	1.65	.045	.065	
D	8.38	9.65	.330	.380	3
D1	6.86	–	.270	–	4
E	9.65	10.67	.380	.420	3,4
E1	6.22	–	.245		4
e	2.54 BSC		.100 BSC		
L	13.46	14.10	.530	.555	
L1	–	1.65	–	.065	4
L2	3.56	3.71	.140	.146	

NOTES:
1. DIMENSIONING AND TOLERANCING PER ASME Y14.5M-1994
2. DIMENSIONS ARE SHOWN IN MILLIMETERS [INCHES].
3. DIMENSION D & E DO NOT INCLUDE MOLD FLASH. MOLD FLASH SHALL NOT EXCEED 0.127 [.005"] PER SIDE. THESE DIMENSIONS ARE MEASURED AT THE OUTMOST EXTREMES OF THE PLASTIC BODY.
4. THERMAL PAD CONTOUR OPTIONAL WITHIN DIMENSION E, L1, D1 & E1.
5. DIMENSION b1 AND c1 APPLY TO BASE METAL ONLY.
6. CONTROLLING DIMENSION: INCH.
7.- OUTLINE CONFORM TO JEDEC TO-262 EXCEPT A1(max.), b(min.) AND D1(min.) WHERE DIMENSIONS DERIVED THE ACTUAL PACKAGE OUTLINE.

LEAD ASSIGNMENTS

IGBTs, CoPACK

1.- GATE
2.- COLLECTOR
3.- EMITTER
4.- COLLECTOR

HEXFET

1.- GATE
2.- DRAIN
3.- SOURCE
4.- DRAIN

DIODES

1.- ANODE (TWO DIE) / OPEN (ONE DIE)
2, 4.- CATHODE
3.- ANODE

TO-262 Part Marking Information

EXAMPLE: THIS IS AN IRL3103L
LOT CODE 1789
ASSEMBLED ON WW 19, 1997
IN THE ASSEMBLY LINE 'C'

Note: 'P' in assembly line position indicates 'Lead-Free'

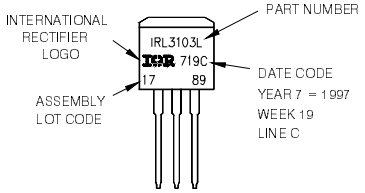

OR

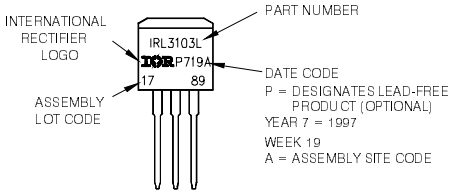

Note: For the most current drawing please refer to IR website at http://www.irf.com/package/pkigbt.html

D²Pak Tape & Reel Information

Dimensions are shown in millimeters (inches)

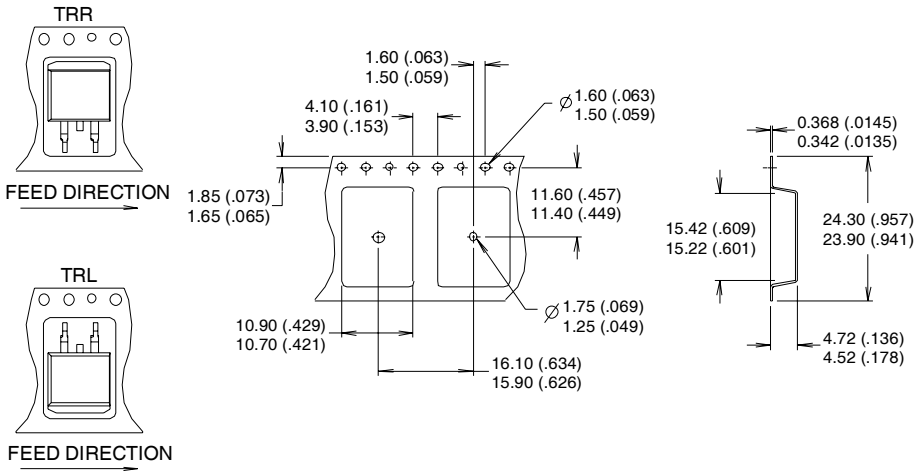

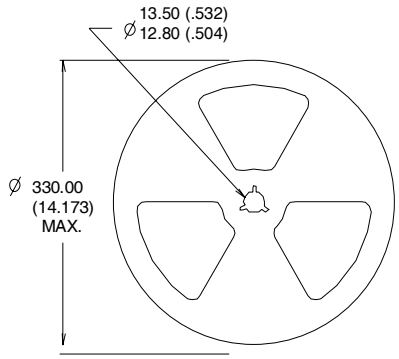

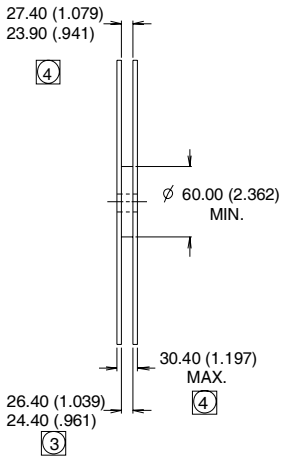

NOTES :
1. COMFORMS TO EIA-418.
2. CONTROLLING DIMENSION: MILLIMETER.
3. DIMENSION MEASURED @ HUB.
4. INCLUDES FLANGE DISTORTION @ OUTER EDGE.

Note: For the most current drawing please refer to IR website at http://www.irf.com/package/pkigbt.html

IR WORLD HEADQUARTERS: 233 Kansas St., El Segundo, California 90245, USA Tel: (310) 252-7105
TAC Fax: (310) 252-7903
Visit us at www.irf.com for sales contact information. 02/2010