2N6027, 2N6028

Preferred Device

Programmable Unijunction Transistor

Programmable Unijunction Transistor Triggers

Designed to enable the engineer to “program’’ unijunction characteristics such as R_{BB}, η, I_V, and I_P by merely selecting two resistor values. Application includes thyristor−trigger, oscillator, pulse and timing circuits. These devices may also be used in special thyristor applications due to the availability of an anode gate. Supplied in an inexpensive TO−92 plastic package for high−volume requirements, this package is readily adaptable for use in automatic insertion equipment.

Features

- Programmable − R_{BB}, η, I_V and I_P
- Low On−State Voltage − 1.5 V Maximum @ I_F = 50 mA
- Low Gate to Anode Leakage Current − 10 nA Maximum
- High Peak Output Voltage − 11 V Typical
- Low Offset Voltage − 0.35 V Typical (R_G = 10 kΩ)
- Pb−Free Packages are Available*

*For additional information on our Pb−Free strategy and soldering details, please download the ON Semiconductor Soldering and Mounting Techniques Reference Manual, SOLDERRM/D.

ON Semiconductor®

http://onsemi.com

PUTs
40 VOLTS, 300 mW

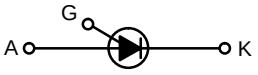

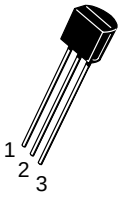

TO−92 (TO−226AA)
CASE 029
STYLE 16

MARKING DIAGRAM

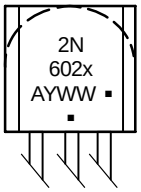

2N602x	= Device Code x = 7 or 8
A	= Assembly Location
Y	= Year
WW	= Work Week
▪	= Pb−Free Package

(Note: Microdot may be in either location)

PIN ASSIGNMENT	
1	Anode
2	Gate
3	Cathode

ORDERING INFORMATION

See detailed ordering and shipping information in the package dimensions section on page 5 of this data sheet.

Preferred devices are recommended choices for future use and best overall value.

© Semiconductor Components Industries, LLC, 2006

May, 2006 − Rev.6

Publication Order Number:
2N6027/D

MAXIMUM RATINGS (T_J = 25°C unless otherwise noted)

Rating	Symbol	Value	Unit
Power Dissipation* Derate Above 25°C	P_F $1/\theta_{JA}$	300 4.0	mW mW/°C
DC Forward Anode Current* Derate Above 25°C	I_T	150 2.67	mA mA/°C
DC Gate Current*	I_G	±50	mA
Repetitive Peak Forward Current 100 μs Pulse Width, 1% Duty Cycle 20 μs Pulse Width, 1% Duty Cycle*	I_{TRM}	 1.0 2.0	A
Non−Repetitive Peak Forward Current 10 μs Pulse Width	I_{TSM}	5.0	A
Gate to Cathode Forward Voltage*	V_{GKF}	40	V
Gate to Cathode Reverse Voltage*	V_{GKR}	−5.0	V
Gate to Anode Reverse Voltage*	V_{GAR}	40	V
Anode to Cathode Voltage* (Note 1)	V_{AK}	±40	V
Capacitive Discharge Energy (Note 2)	E	250	μJ
Power Dissipation (Note 3)	P_D	300	mW
Operating Temperature	T_{OPR}	−50 to +100	°C
Junction Temperature	T_J	−50 to +125	°C
Storage Temperature Range	T_{stg}	−55 to +150	°C

Stresses exceeding Maximum Ratings may damage the device. Maximum Ratings are stress ratings only. Functional operation above the Recommended Operating Conditions is not implied. Extended exposure to stresses above the Recommended Operating Conditions may affect device reliability.

*Indicates JEDEC Registered Data

1. Anode positive, R_{GA} = 1000 Ω
   Anode negative, R_{GA} = open
2. $E = 0.5 \bullet CV^2$ capacitor discharge energy limiting resistor and repetition.
3. Derate current and power above 25°C.

THERMAL CHARACTERISTICS

Characteristic	Symbol	Max	Unit
Thermal Resistance, Junction−to−Case	$R_{\theta JC}$	75	°C/W
Thermal Resistance, Junction−to−Ambient	$R_{\theta JA}$	200	°C/W
Maximum Lead Temperature for Soldering Purposes (<1/16″ from case, 10 seconds maximum)	T_L	260	°C

ELECTRICAL CHARACTERISTICS (T_C = 25°C unless otherwise noted)

Characteristic		Fig. No.	Symbol	Min	Typ	Max	Unit
Peak Current*		2,9,11	I_P				μA
(V_S = 10 Vdc, R_G = 1 MΩ)	2N6027			–	1.25	2.0	
	2N6028			–	0.08	0.15	
(V_S = 10 Vdc, R_G = 10 kΩ)	2N6027			–	4.0	5.0	
	2N6028			–	0.70	1.0	
Offset Voltage*		1	V_T				V
(V_S = 10 Vdc, R_G = 1 MΩ)	2N6027			0.2	0.70	1.6	
	2N6028			0.2	0.50	0.6	
(V_S = 10 Vdc, R_G = 10 kΩ)	(Both Types)			0.2	0.35	0.6	
Valley Current*		1,4,5	I_V				μA
(V_S = 10 Vdc, R_G = 1 MΩ)	2N6027			–	18	50	
	2N6028			–	18	25	
(V_S = 10 Vdc, R_G = 10 k Ω)	2N6027			70	150	–	
	2N6028			25	150	–	
(V_S = 10 Vdc, R_G = 200 Ω)	2N6027			1.5	–	–	
	2N6028			1.0	–	–	mA
Gate to Anode Leakage Current*		–	I_{GAO}				nAdc
(V_S = 40 Vdc, T_A = 25°C, Cathode Open)				–	1.0	10	
(V_S = 40 Vdc, T_A = 75°C, Cathode Open)				–	3.0	–	
Gate to Cathode Leakage Current (V_S = 40 Vdc, Anode to Cathode Shorted)		–	I_{GKS}	–	5.0	50	nAdc
Forward Voltage* (I_F = 50 mA Peak) (Note 4)		1,6	V_F	–	0.8	1.5	V
Peak Output Voltage* (V_G = 20 Vdc, C_C = 0.2 μF)		3,7	V_o	6.0	11	–	V
Pulse Voltage Rise Time (V_B = 20 Vdc, C_C = 0.2 μF)		3	t_r	–	40	80	ns

*Indicates JEDEC Registered Data

4. Pulse Test: Pulse Width ≤ 300 μs, Duty Cycle ≤ 2%.

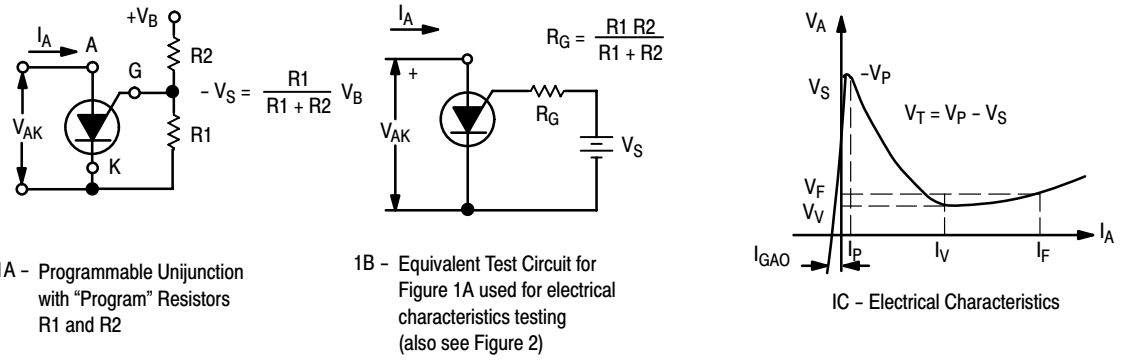

1A – Programmable Unijunction with "Program" Resistors R1 and R2

1B – Equivalent Test Circuit for Figure 1A used for electrical characteristics testing (also see Figure 2)

IC – Electrical Characteristics

Figure 1. Electrical Characterization

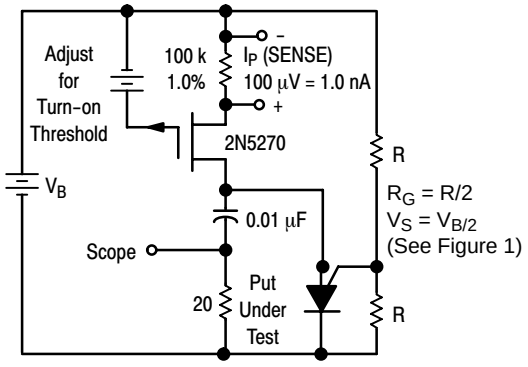

Figure 2. Peak Current (I_P) Test Circuit

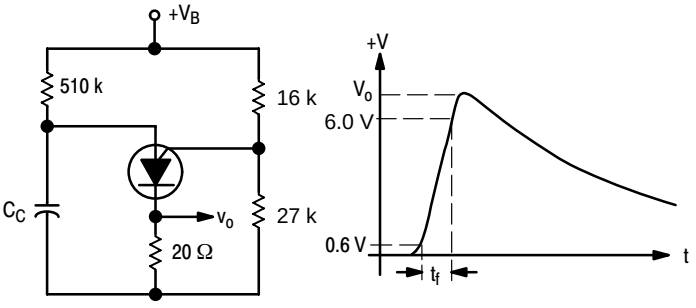

Figure 3. V_o and t_r Test Circuit

TYPICAL VALLEY CURRENT BEHAVIOR

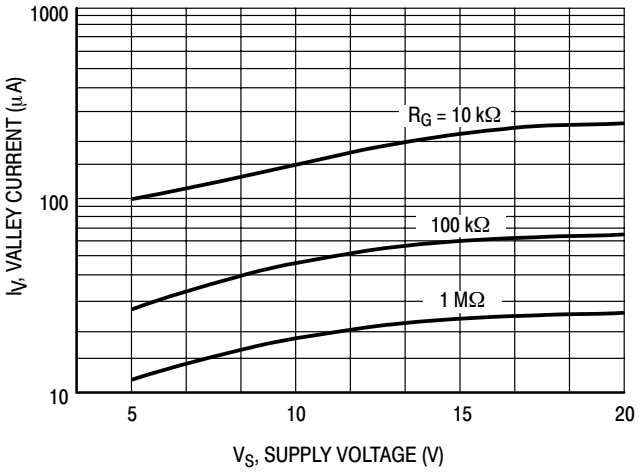

Figure 4. Effect of Supply Voltage

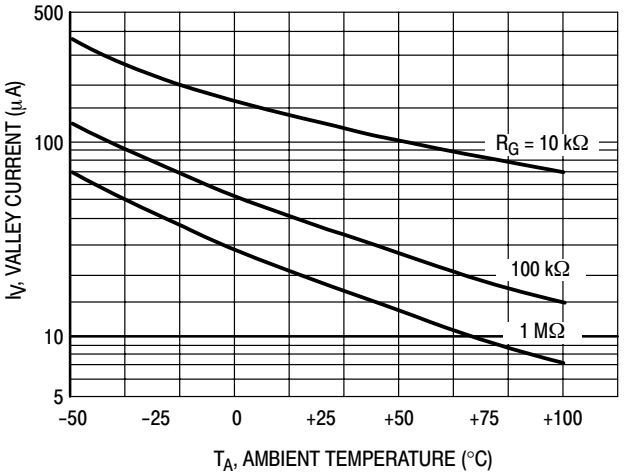

Figure 5. Effect of Temperature

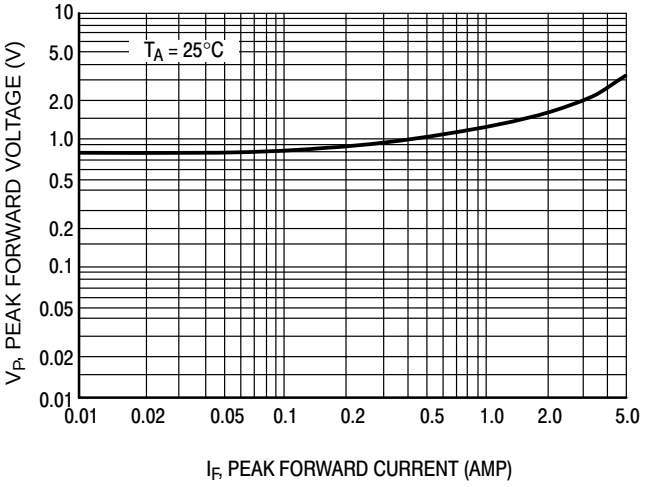

Figure 6. Forward Voltage

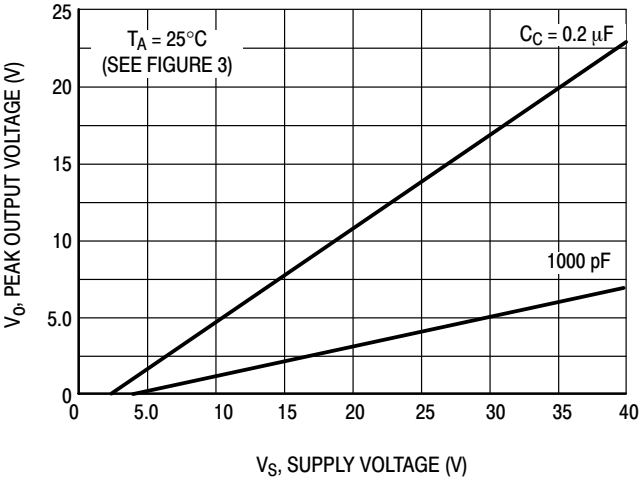

Figure 7. Peak Output Voltage

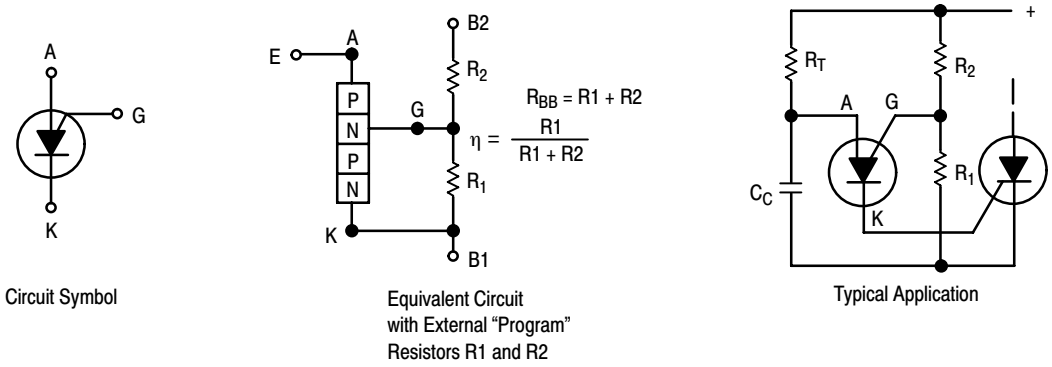

Figure 8. Programmable Unijunction

TYPICAL PEAK CURRENT BEHAVIOR

2N6027

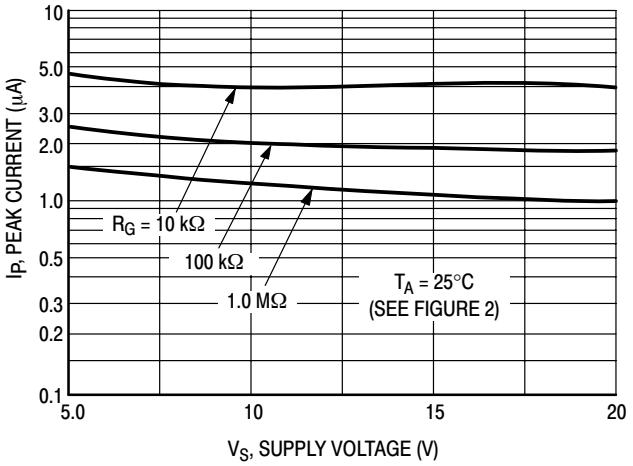

Figure 9. Effect of Supply Voltage and R_G

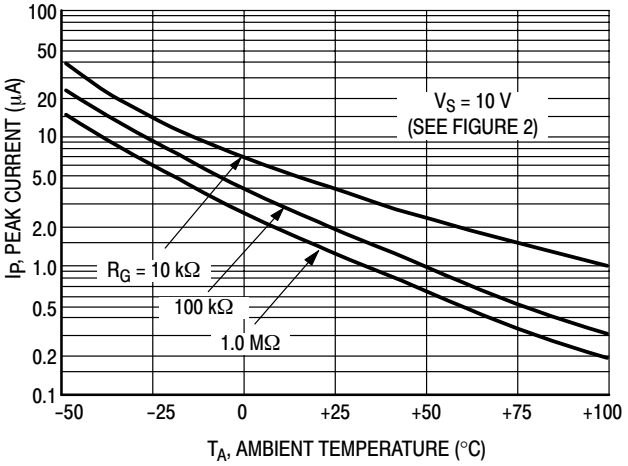

Figure 10. Effect of Temperature and R_G

2N6028

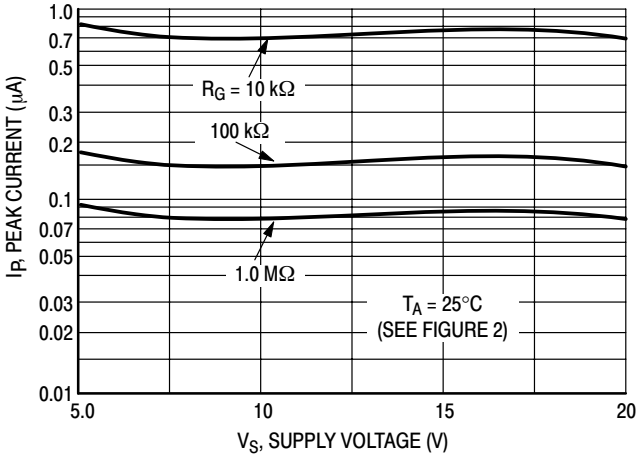

Figure 11. Effect of Supply Voltage and R_G

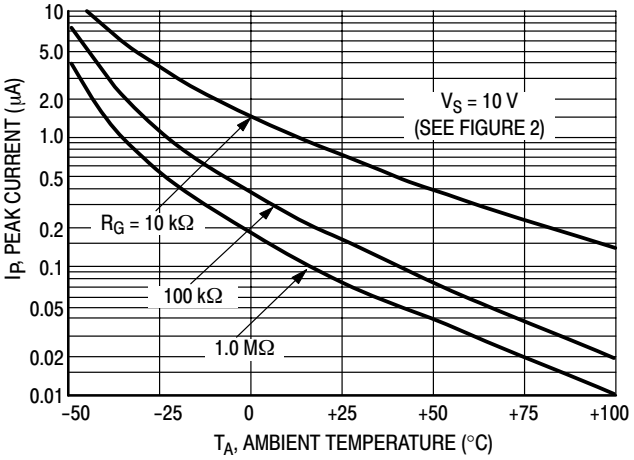

Figure 12. Effect of Temperature and R_G

ORDERING INFORMATION

U.S.	European Equivalent	Shipping†	Description of TO−92 Tape Orientation
2N6027	2N6027RL1 2N6027RL1G	5000 Units / Box	N/A − Bulk
2N6027G			
2N6028			
2N6028G			
2N6027RLRA		2000 / Tape & Reel	Round side of TO−92 and adhesive tape visible
2N6027RLRAG			
2N6028RLRA			
2N6028RLRAG			
2N6028RLRM		2000 / Tape & Ammo Box	Flat side of TO−92 and adhesive tape visible
2N6028RLRMG			
2N6028RLRP			Round side of TO−92 and adhesive tape visible
2N6028RLRPG			

†For information on tape and reel specifications, including part orientation and tape sizes, please refer to our Tape and Reel Packaging Specifications Brochure, BRD8011/D.
*The “G” suffix indicates Pb−Free package available.

PACKAGE DIMENSIONS

TO−92 (TO−226AA)
CASE 029−11
ISSUE AL

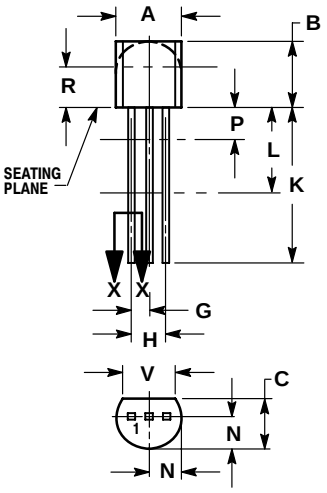

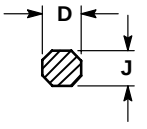

SECTION X−X

NOTES:
1. DIMENSIONING AND TOLERANCING PER ANSI Y14.5M, 1982.
2. CONTROLLING DIMENSION: INCH.
3. CONTOUR OF PACKAGE BEYOND DIMENSION R IS UNCONTROLLED.
4. LEAD DIMENSION IS UNCONTROLLED IN P AND BEYOND DIMENSION K MINIMUM.

	INCHES		MILLIMETERS	
DIM	MIN	MAX	MIN	MAX
A	0.175	0.205	4.45	5.20
B	0.170	0.210	4.32	5.33
C	0.125	0.165	3.18	4.19
D	0.016	0.021	0.407	0.533
G	0.045	0.055	1.15	1.39
H	0.095	0.105	2.42	2.66
J	0.015	0.020	0.39	0.50
K	0.500	---	12.70	---
L	0.250	---	6.35	---
N	0.080	0.105	2.04	2.66
P	---	0.100	---	2.54
R	0.115	---	2.93	---
V	0.135	---	3.43	---

STYLE 16:
PIN 1. ANODE
2. GATE
3. CATHODE

ON Semiconductor and ON are registered trademarks of Semiconductor Components Industries, LLC (SCILLC). SCILLC reserves the right to make changes without further notice to any products herein. SCILLC makes no warranty, representation or guarantee regarding the suitability of its products for any particular purpose, nor does SCILLC assume any liability arising out of the application or use of any product or circuit, and specifically disclaims any and all liability, including without limitation special, consequential or incidental damages. “Typical” parameters which may be provided in SCILLC data sheets and/or specifications can and do vary in different applications and actual performance may vary over time. All operating parameters, including “Typicals” must be validated for each customer application by customer’s technical experts. SCILLC does not convey any license under its patent rights nor the rights of others. SCILLC products are not designed, intended, or authorized for use as components in systems intended for surgical implant into the body, or other applications intended to support or sustain life, or for any other application in which the failure of the SCILLC product could create a situation where personal injury or death may occur. Should Buyer purchase or use SCILLC products for any such unintended or unauthorized application, Buyer shall indemnify and hold SCILLC and its officers, employees, subsidiaries, affiliates, and distributors harmless against all claims, costs, damages, and expenses, and reasonable attorney fees arising out of, directly or indirectly, any claim of personal injury or death associated with such unintended or unauthorized use, even if such claim alleges that SCILLC was negligent regarding the design or manufacture of the part. SCILLC is an Equal Opportunity/Affirmative Action Employer. This literature is subject to all applicable copyright laws and is not for resale in any manner.

PUBLICATION ORDERING INFORMATION

LITERATURE FULFILLMENT:
Literature Distribution Center for ON Semiconductor
P.O. Box 5163, Denver, Colorado 80217 USA
Phone: 303−675−2175 or 800−344−3860 Toll Free USA/Canada
Fax: 303−675−2176 or 800−344−3867 Toll Free USA/Canada
Email: orderlit@onsemi.com

N. American Technical Support: 800−282−9855 Toll Free USA/Canada
Europe, Middle East and Africa Technical Support:
Phone: 421 33 790 2910
Japan Customer Focus Center
Phone: 81−3−5773−3850

ON Semiconductor Website: **www.onsemi.com**

Order Literature: http://www.onsemi.com/orderlit

For additional information, please contact your local Sales Representative